ECE TYPE-APPROVAL CERTIFICATE

E24

Communication concerning:[2] ~~Approval granted~~
Approval extended
~~Approval refused~~
~~Approval withdrawn~~
~~Production definitively discontinued~~

Of a vehicle type with regard to braking, pursuant to Regulation No. 13

Approval No: ***E24*13R11/18*0056*02***

Reason(s) for extension:		***- Addition of versions (EURO VI E engines)*** ***- Addition of suspension drawings***
1.	Trade name or make of the vehicle:	***Iveco / System Truck***
2.	Vehicle category:	***N3***
3.	Vehicle type:	***ST 2Y3C 13R***
4.	Manufacturer's name and address:	***S.T. System Truck S.p.A.*** ***Via Paesa, 28*** ***IT-46048 Roverbella (MN)***
5.	If applicable name and address of manufacturer's authorised representative:	***N/A***
6.	Mass of the vehicle:	
6.1.	Maximum mass of the vehicle:	***35000 kg***
6.2.	Minimum mass of the vehicle:	***8520 kg***
7.	Distribution of mass on each axle (maximum value):	*Axle 1:* ***9000 kg*** *Axle 2:* ***7500 kg*** *Axle 3:* ***12000 kg*** *Axle 4:* ***8000 kg***
8.	Make and type of brake linings, discs and drums:	***See information folder for details***
8.1.	Brake linings	
8.1.1.	Brake linings tested to all relevant prescriptions of Annex 4:	***Yes***

NSAI, 1 Swift Square, Northwood, Santry, Dublin 9, Ireland. Telephone: (+353+1) 807 3800, Facsimile: 01-807 3844

Approval No: ***E24*13R11/18*0056*02***

8.1.2.	Alternative brake linings tested in Annex 15:	***N/A***
8.2.	Brake discs and drums	
8.2.1.	Identification code of brake discs covered by the braking system approval:	***See information folder for details***
8.2.2.	Identification code of brake drums covered by the braking system approval:	***See information folder for details***
9.	In the case of a power driven vehicle	
9.1.	Engine type:	***See information folder for details***
9.2.	Number and ratios of gears:	***See information folder for details***
9.3.	Final drive ratio:	***3.2***
9.4.	If applicable, maximum mass of trailer which may be coupled:	
9.4.1.	Full trailer:	***See information folder for details***
9.4.2.	Semi-trailer:	***N/A***
9.4.3.	Centre-axle trailer (indicate also the maximum ratio of the coupling overhang to the wheelbase):	***See information folder for details***
9.4.4.	Unbraked trailer:	***750kg***
9.4.5.	Maximum mass of the combination:	***60000 kg***
10.	Tyre dimensions:	***See information folder for details***
10.1.	Temporary-use spare wheel/tyre dimensions:	***N/A***
10.2.	Vehicle meets the technical requirements of Annex 3 to Regulation No. 64 (~~yes~~/no):	***No.***
11.	Number and arrangement of axles:	***See information folder for details***
12.	Brief description of braking equipment:	***See information folder for details***
13.	Mass of vehicle when tested:	***Mass in running order and Technically Permissible maximum laden mass***

NSAI, 1 Swift Square, Northwood, Santry, Dublin 9, Ireland. Telephone: (+353+1) 807 3800, Facsimile: 01-807 3844

Approval No: ***E24*13R11/18*0056*02***

14.	Results of the tests and vehicle characteristics:	***See test report IT18/1369 up to -02 and manufacturer's information document for details.***
14.6.	Braking system(s) used during the Type-II/IIA test:	***Engine brake integrated with retarder***
14.7.	Reaction time and dimensions of flexible pipes:	***See information folder for details***
14.7.1.	Reaction time at the brake actuator:	***See information folder for details***
14.7.2.	Reaction time at the control line coupling head:	***See information folder for details***
14.7.3.	Flexible pipes of tractors for semi-trailers: Reservoir – modulator: internal diameter (mm): Modulator – brake chambers internal diameter (mm):	***N/A***
14.8.	Information required under paragraph 7.3. of annex 10 to this Regulation:	***N/A***
14.9.	Vehicle ~~is~~/is not equipped to tow a trailer with electrical braking systems:	***Is not***
14.10.	Vehicle is/~~is not~~ equipped with an anti-lock system:	***Is***
14.10.1.	Category of anti-lock system:	***Category 1~~/2/3~~*** ***Category ~~A/B~~***
14.10.2.	The vehicle fulfils the requirements of annex 13:	***Yes***
14.10.3.	Vehicle is/~~is not~~ equipped to tow trailers equipped with anti-lock systems:	***Is***
14.10.4.	Where an annex 19 test report has been utilised, the test report number(s) shall be stated:	***N/A***
14.11.	The vehicle is subject to the requirements of annex 5 (ADR):	***Yes***
14.11.1.	The vehicle fulfils the endurance braking performance requirements according to the Type-IIA test up to a total maximum mass of ….. tonnes:	***See information folder for details***
14.11.2.	The power driven vehicle is fitted with a control device for the endurance braking system on the trailer:	***N/A***
14.11.3.	In the case of trailers, the vehicle is equipped with an endurance braking system:	***No***

NSAI, 1 Swift Square, Northwood, Santry, Dublin 9, Ireland. Telephone: (+353+1) 807 3800, Facsimile: 01-807 3844

Approval No: ***E24*13R11/18*0056*02***

14.12.	Vehicle is equipped with a control line(s) according to paragraphs ~~5.1.3.1.1./~~5.1.3.1.2~~/5.1.3.1.3.:~~	***5.1.3.1.2***
14.13.	Adequate documentation according to annex 18 was supplied in respect of the following systems:	***N/A***
14.14.	The vehicle is equipped with a vehicle stability function:	***Yes***
	If yes:	
	The vehicle stability function has been tested according to and fulfils the requirements of Annex 21:	***Yes***
	Vehicle stability function is optional equipment:	***No***
	Vehicle stability function includes directional control:	***Yes***
	Vehicle stability function includes roll-over control:	***Yes***
14.14.1.	Where an Annex 19 test report has been utilised, the test report number shall be stated:	***N/A***
14.15.	The vehicle is equipped with an automated connector: yes/no[2]:	***N/A***
14.15.1.	If yes, does the automated connector fulfil the requirements of Annex 22: yes/no[2]:	***N/A***
14.15.2.	The automated connector is of category A/B/C/D2"	***N/A***
15.	Additional information for use with the annex 20 alternative type approval procedure:	***N/A***
15.1.	Description of suspension:	***N/A***
15.1.1.	Manufacturer:	***N/A***
15.1.2.	Make:	***N/A***
15.1.3.	Type:	***N/A***
15.1.4.	Model:	***N/A***
15.2.	Wheelbase of vehicle tested:	***N/A***
15.3.	Actuation differential (if any) within axle group:	***N/A***
16.	Trailer approved utilising annex 20 procedure: (If yes, appendix 2 to annex 2 shall be completed)	***N/A***

NSAI, 1 Swift Square, Northwood, Santry, Dublin 9, Ireland. Telephone: (+353+1) 807 3800, Facsimile: 01-807 3844

Approval No: ***E24*13R11/18*0056*02***

17.	Vehicle submitted for approval on:	***As before and 01.03.2022***
18.	Technical service responsible for conducting approval tests:	***FAKT S.r.l.,*** ***Via Lithos, 53,*** ***IT-25086 Rezzato (BS),*** ***Italy.***
19.	Date of report issued by that service:	***As before and 28.02.2022***
20.	Number of report issued by that service:	***IT18/1369 up to -02***
21.	Approval ~~granted~~/~~refused~~/extended/~~withdrawn~~:	***Extended***
22.	Position of approval mark on the vehicle:	***Adhesive plate on the front wall behind radiator grill near manufacturer's plate (stage 2)***
23.	Place:	***Dublin.***
24.	Date:	***01st April, 2022***
25.	Signature:	

26. The summary referred to in paragraph 4.3. of this Regulation is annexed to this communication.

**/ At the request of (an) applicant(s) for Regulation No. 90 approval, the information shall be provided by the Type Approval Authority as contained in Appendix 1 to this annex. However, this information shall not be provided for purposes other than Regulation No. 90 approvals.*

NSAI, 1 Swift Square, Northwood, Santry, Dublin 9, Ireland. Telephone: (+353+1) 807 3800, Facsimile: 01-807 3844

Approval No: ***E24*13R11/18*0056*02***

Index to the Information Package

Date of issue:	***31st August, 2018***
Date of latest amendment:	***01st April, 2022***
Reason for extension/revision:	***See top of page 1 of certificate for details***

1. Additional conditions, and advisory notes on legal alternatives.

2. Test report(s)

- numbers(s):	***IT18/1369 up to -02***
- date of issue:	***26.07.2018***
- date of latest amendment:	***28.02.2022***

3. Information document

- number(s):	***ST_2Y3C_13R up to _02***
- date of issue:	***25.06.2018***
- date of latest amendment:	***03.02.2022***
Documentation:	***158 pages***

NSAI, 1 Swift Square, Northwood, Santry, Dublin 9, Ireland. Telephone: (+353+1) 807 3800, Facsimile: 01-807 3844

Approval No: ***E24*13R11/18*0056*02***

Appendix: **Additional conditions, and advisory notes on legal alternatives**

A: Additional conditions:

1. The attached technical report, with any of its attachments, forms part of this Type Approval certificate.
2. Each type from series production shall be to the measurements specified in the attached drawings, and shall be manufactured only from the materials specified in the Approval documents.
3. Changes in the type are permitted only with the explicit permission of NSAI. Breaches of this requirement will lead to a withdrawal of the Type Approval, and in addition may be subject to criminal prosecution.
4. At regular intervals, any tests or associated checks prescribed by the applicable legislation to verify continued conformity with the approved type shall be carried out. The manufacturer shall demonstrate compliance with this by submitting to NSAI evidence of adequate arrangements and documented control plans for each type approved.
5. Any set of samples or test pieces showing evidence of non-conformity shall give rise to further sampling and testing and all steps shall be taken to restore conformity of production.
6. This Type Approval will expire when it is surrendered by the holder, or withdrawn by NSAI, or when the approved type no longer conforms to legal requirements. The recall of the Type Approval can be issued by NSAI when the conditions required for the issuing or continuation of the Type Approval are no longer current, or when the Approval holder is in breach of the duties attached to the Type Approval, or when it is established that the approved type no longer meets the requirements of traffic safety.
7. Changes in the company name, address or manufacturing site, as well as in any of the sales or other agents specified in the issuing of the approval must immediately be notified to NSAI.
8. The duties imposed by the issuing of this certificate are not transferable. The legal protection of third parties is not affected by this certificate.
9. When the manufacture or sale of the system, component or separate technical unit has not been started within one year of the date of issue of this certificate, then NSAI is to be informed. This requirement also applies when the manufacture or sale has been halted for more than one year, or when it ought to have been halted for more than one year. The initial commencement of manufacture or sale, or the resumption of manufacture or sale, shall then be notified to NSAI within one month of commencement or resumption.

B: Legal Options:

Any objection to the requirements set out in this certificate shall be made within one month of the date of issue. The objection shall be made, in writing, to NSAI in Dublin.

NSAI, 1 Swift Square, Northwood, Santry, Dublin 9, Ireland. Telephone: (+353+1) 807 3800, Facsimile: 01-807 3844

Test Report

No. IT18/1369 Vers. 02

Agreement concerning the Adoption of Harmonized Technical United Nations Regulations for Wheeled Vehicles, Equipment and Parts which can be Fitted and/or be Used on Wheeled Vehicles and the Conditions for Reciprocal Recognition of Approvals Granted on the Basis of these United Nations Regulations (Revision 3)

Uniform provisions concerning the approval of vehicles of categories M, N and O with regard to braking

UN-R13 of **01.06.1970**

as last amended by

series of amendments 11 – Supplement 18 of **30.09.2021**

Approval status

☐	Granting of a type approval No. …
☒	Extension to type approval no. E24*13R11/14*0056*01
☐	Correction to type approval no. …
☐	Documentation of test results

Structure of the Test Report:

0 : General
1 : Test vehicle(s)/-object(s)
2 : Test record
3 : Enclosures
4 : Statement of conformity

0 General

0.1	Make	: Iveco / System Truck
0.2	Type	: ST 2Y3C 13R
0.2.1	Variant(s)/version(s)	: See information document - Annex 0.0 and 0.1
0.2.2	Commercial name(s)	: See information document point 0.2.1.
0.3	Category of vehicle	: N3
0.4	Name and address of the manufacturer	: S.T. System Truck S.p.A. Via Paesa, 28 IT-46048 Roverbella (MN)
0.4.1	For multi-stage approved vehicles, company name and address of the manufacturer of the base/previous stage(s) vehicle:	: Iveco Magirus AG DE-89070 Ulm
0.5	Information folder Information document	:
	No	: ST_2Y3C_13R_02
	Date of issue	: 25.06.2018
	Date of last change	: 03.02.2022
0.6	List of modifications	: - Addition of versions (EURO VI E engines) - Addition of suspension drawings

1 Test vehicle(s)/ - object(s):

1.1	Description:	: representative vehicle (series of tests A)
1.1.1	Variant:	: ICS
	Version:	: 11CB6DFS80B2B80SMPNF
	VIN (Stage 1):	: WJME2NUH60C287796
1.1.2	Gear box type:	: 16S 222? TD (Manual)
	No. of gears:	: 16
1.1.3	Number and arrangement of axles:	: 4; 1st steering / non powered axle 2nd steering / non powered axle 3rd fixed / powered axle 4th steering / non powered axle
1.1.4	Wheelbase(s):	: 1-2: 2835 mm 2-3: 1365 mm 3-4: 1395 mm
1.1.5	Tyres	
	1st axle:	: 385/65 R22,5 160/-K (single)
	2nd axle:	: 315/80 R22,5 156/-K (single)
	3rd axle:	: 315/80 R22,5 -/150K (twin)
	4th axle:	: 315/80 R22,5 156/-K (single)
1.1.6	Kind of suspension:	: 1st longitudinal parabolic leaf spring 2nd pneumatic 3rd pneumatic 4th pneumatic
1.1.7	Engine	
	Manufacturer:	: FPT Industrial S.p.A.
	Type:	: F4AFE411C
1.1.8	Brakes	
	Type and characteristics of the brakes:	: Compressed air brake system with separate circuits for the front, rear, parking and auxiliary equipment, electronically and/or pneumatically controlled.

	Brake lining:	: 1st axle: Make: Ferodo - Type: 4550 (IS25) 2nd axle: Make: Ferodo - Type: 4550 (IS25) 3rd axle: Make: Ferodo - Type: 4550 (IS25) 4th axle: Make: Ferodo - Type: 4550 (IS25) asbestos free
	Wheel brake:	: 1st axle: brake disk Ø432 mm 2nd axle: brake disk Ø432 mm 3rd axle: brake disk Ø432 mm 4th axle: brake disk Ø432 mm
	Brake Chamber:	: 1st axle: 24/14'' 2nd axle: 12'' 3rd axle: 20/24'' 4th axle: 14"
	Anti-lock braking system:	: Category 1
	Service braking system:	: Foot operated, air brake with mechanical control. Two circuit: 1st for axles 1, 2nd for axles 2, 3 and 4.
	Secondary braking system:	: 2nd circuit of the service braking system
	Parking braking system:	: Spring brake, manual control, mechanical actuated on axle 1 and 3

1.1.9	Mass of vehicle during test(s)		unladen	laden
	Total:	:	9670 kg	36010 kg
	1st axle:	:	4720 kg	9010 kg
	2nd axle:	:	1420 kg	7250 kg
	3rd axle:	:	2180 kg	11750 kg
	4th axle:	:	1350 kg	8000 kg
	Height of center of gravity:	:	980 mm	1500 mm

1.1.10 Maximum speed: : 90 km/h

1.2	Description:	: representative vehicle (series of tests B)
1.2.1	Variant:	: BCS
	Version:	: 12CBCSRS80B2B80SMPNF A
	VIN (Stage 1):	: WJME62RU90C399721
1.2.2	Gear box type:	: 12TX 242O TD (Manual)
	No. of gears:	: 12
1.2.3	Number and arrangement of axles:	: 4; 1st steering / non powered axle 2nd steering / non powered axle 3rd fixed / powered axle 4th steering / non powered axle
1.2.4	Wheelbase(s):	: 1-2: 2835 mm 2-3: 1365 mm 3-4: 1395 mm
1.2.5	Tyres	
	1st axle:	: 315/80 R22,5 156/-K (single)
	2nd axle:	: 315/80 R22,5 156/-K (single)
	3rd axle:	: 315/80 R22,5 -/150K (twin)
	4th axle:	: 315/80 R22,5 156/-K (single)
1.2.6	Kind of suspension:	: 1st longitudinal parabolic leaf spring 2nd pneumatic 3rd pneumatic 4th pneumatic
1.2.7	Engine	
	Manufacturer:	: FPT Industrial S.p.A.
	Type:	: F3HFE611G
1.2.8	Brakes	
	Type and characteristics of the brakes:	: Compressed air brake system with separate circuits for the front, rear, parking and auxiliary equipment, electronically and/or pneumatically controlled.
	Brake lining:	: 1st axle: Make: Ferodo - Type: 4550 (IS25) 2nd axle: Make: Ferodo - Type: 4550 (IS25) 3rd axle: Make: Ferodo - Type: 4550 (IS25) 4th axle: Make: Ferodo - Type: 4550 (IS25) asbestos free

	Wheel brake:	: 1st axle: brake disk Ø432 mm 2nd axle: brake disk Ø432 mm 3rd axle: brake disk Ø432 mm 4th axle: brake disk Ø432 mm
	Brake Chamber:	: 1st axle: 30/14'' 2nd axle: 12'' 3rd axle: 20/24'' 4th axle: 12'' (Annex 4) resp. 14'' (Annex 13)
	Anti-lock braking system:	: Category 1
	Service braking system:	: Foot operated, air brake with mechanical control. Two circuit: 1st for axles 1, 2nd for axles 2, 3 and 4.
	Secondary braking system:	: 2nd circuit of the service braking system
	Parking braking system:	: Spring brake, manual control, mechanical actuated on axle 1 and 3

			unladen	laden
1.2.9	Mass of vehicle during test(s)			
	Total:	:	10430 kg	35190 kg
	1st axle:	:	5160 kg	8010 kg
	2nd axle:	:	1420 kg	7400 kg
	3rd axle:	:	2430 kg	11900 kg
	4th axle:	:	1420 kg	7880 kg
	Height of center of gravity:	:	980 mm	1360 mm

1.2.10 Maximum speed: : 90 km/h

1.2	Description:	: representative vehicle (series of tests C)
1.2.1	Variant:	: Not applicable
	Version:	: Not applicable
	VIN (Stage 1):	: Not applicable
1.2.2	Gear box type:	: Not applicable
	No. of gears:	: Not applicable
1.2.3	Number and arrangement of axles:	: 4; 1st steering / non powered axle 2nd steering / non powered axle 3rd fixed / powered axle 4th n.a. (lifted up)
1.2.4	Wheelbase(s):	: 1-2: 2440 mm 2-3: 1360 mm 3-4: n.a. (lifted up)
1.2.5	Tyres	
	1st axle:	: 315/60 R22,5 156/-K (single)
	2nd axle:	: 315/60 R22,5 156/-K (single)
	3rd axle:	: 315/60 R22,5 -/150K (twin)
	4th axle:	: n.a. (lifted up)
1.2.6	Kind of suspension:	: 1st longitudinal parabolic leaf spring 2nd pneumatic 3rd pneumatic 4th n.a. (lifted up)
1.2.7	Engine	
	Manufacturer:	: FPT Industrial S.p.A.
	Type:	: F3HFE611G
1.2.8	Brakes	
	Type and characteristics of the brakes:	: Compressed air brake system with separate circuits for the front, rear, parking and auxiliary equipment, electronically and/or pneumatically controlled.
	Brake lining:	: 1st axle: Make: Ferodo - Type: 4550 (IS25) 2nd axle: Make: Ferodo - Type: 4550 (IS25) 3rd axle: Make: Ferodo - Type: 4550 (IS25) 4th axle: n.a. (lifted up)

	Wheel brake:	: 1st axle: brake disk Ø432 mm 2nd axle: brake disk Ø432 mm 3rd axle: brake disk Ø432 mm 4th axle: n.a. (lifted up)
	Brake Chamber:	: 1st axle: 30/14'' 2nd axle: 12'' 3rd axle: 20/24'' 4th axle: n.a. (lifted up)
	Anti-lock braking system:	: Category 1
	Service braking system:	: Foot operated, air brake with mechanical control. Two circuit: 1st for axles 1, 2nd for axles 2 and 3
	Secondary braking system:	: 2nd circuit of the service braking system
	Parking braking system:	: Spring brake, manual control, mechanical actuated on axle 1 and 3

1.2.9	Mass of vehicle during test(s)		unladen	laden
	Total:	:	7370 kg	27050 kg
	1st axle:	:	4740 kg	8100 kg
	2nd axle:	:	1090 kg	7620 kg
	3rd axle:	:	1540 kg	11300 kg
	4th axle:	:	-- kg	-- kg
	Height of center of gravity:	:	763 mm	1300 mm

1.2.10 Maximum speed: : 90 km/h

2 Test record

2.1	Place of test	: series of tests A-B: IT-Balocco (VC) + IT-Roverbella (MN) series of tests C: DE-Ulm
	Date of test	: series of tests A : 30.05.2014 + 17.06.2014 series of tests B: 06.07.2018 + 19.07.2018 series of tests C: 23÷25.07.2019
2.2	Parameter of the test area	
	Test track	: Asphalt & concrete dry, ceramic tiles wet
	Air temperature	: series of tests A: 27 °C series of tests B : 29 °C series of tests C : 26 °C
	Velocity of wind	: < 2,5m/s
2.3	Equipment for measuring and testing	: The equipment on which the tests were carried out, fulfilled the requirements of the above mentioned Regulation.

2.4 Test results

Series of tests A

2.4.1 Test type 0:

Unladen Engine disconnected	Test speed [km/h]	Braking performance [m/s²]	Force applied to the control [N]
Service brake	60	6.0	50
Axle 1	40	3.5	120
Axle 2+3+4	40	2.2	200
Service brake (@3bar)	40	4.2	100

No abnormal vibration, vehicle keeps lane

Laden Engine disconnected	Test speed [km/h]	Braking performance [m/s²]	Force applied to the control [N]
Service brake	60	6.4	100
Axle 1	40	3.0	200
Axle 2+3+4	40	4.0	140
Service brake (@3bar)	40	5.5	100

No abnormal vibration, vehicle keeps lane

Unladen Engine connected	Test speed [km/h]	Braking performance [m/s²]	Force applied to the control [N]
	27	6.1	70
	35	6.0	50
	72	6.5	100

No abnormal vibration, vehicle keeps lane

Laden Engine connected	Test speed [km/h]	Braking performance [m/s²]	Force applied to the control [N]
	27	5.0	100
	35	5.0	110
	72	5.0	100

No abnormal vibration, vehicle keeps lane

2.4.3 Test type I:

Conditions during the heating : duration of a braking cycle: 60s
No. of brake cycles: 20
Initial speed V1: 60km/h
Final speed V2: 30km/h
deceleration dm: 3m/s²

Laden	Test speed [km/h]	Braking performance [m/s²]	Force applied to the control [N]
Service brake (heated)	60	5.5	150

No abnormal vibration, vehicle keeps lane

2.4.4 Test type II

Equivalent test on track : 1,2 m/s²

Braking system(s) used : Engine brake integrated with retarder

2.4.5 Test type IIA

Equivalent test on track : 1,2 m/s²

Braking system(s) used : Engine brake integrated with retarder

2.4.6 Parking brake

Holding force:

Uphill gradient (18%) : 6,5t (forward)
Downhill gradient (18%) : 6,5t (reverse)

2.4.7 Reaction time : 0,6 ≤ 0,6s

2.4.8 Dimensions of flexible pipes : fulfilled
(refer to drawing no. 25.01.20.0024)

2.4.9 Charging time of air reservoirs : fulfilled
T1= 1’ 10’’; T2= 4’ 45’’;T3=6’ 00’’
(vehicles to which the coupling of a trailer is authorized)

2.4.10 Spring brake according to Annex 8 : fulfilled

2.4.11 Compatibility between tractor and trailer : fulfilled

2.4.12 ABS according to Annex 13

General requirements : fulfilled

2.4.13 ABS - Energy consumption : Braking performance @ 40km/h at the 5th full brake with brakes reservoirs isolated: 5.5 m/s²

2.4.14 ABS - Utilization of adhesion :

	k_a [≥0,5]	k_b [≤0,3]	k_a/k_b [≥2,0]
Laden:	0.580	0.136	4.3
Unladen:	0.671	0.115	5.8

	Low grip surface	High grip surface
	ε [≥0,75]	ε [≥0,75]
Laden:	0.98	0.92
Unladen:	0.84	0.89

2.4.15 ABS - Additional checks : fulfilled

2.4.16 ABS - Residual braking performance in event of failure within the electric control transmission :

	Test speed [km/h]	Braking performance [m/s²]	Force applied to the control [N]
Laden:	40	3.0	50
Unladen:	40	3.5	50

2.4.17 The vehicle fulfils the requirements of Annex 13 : yes

2.4.18 Vehicle equipped to tow trailers equipped with anti-lock systems : yes

2.4.19 The vehicle is subject to the requirements of Annex 5 (ADR) : yes

2.4.20 Vehicle is equipped with a control line(s) according to : paragraphs ~~5.1.3.1.1.~~ / 5.1.3.1.2. / ~~5.1.3.1.3.~~

2.4.21	The vehicle is equipped with a vehicle stability function	: yes Directional control and rollover control in combination with brake activation and engine power output control
	vehicle stability function according to Annex 21:	: fulfilled Test method: demonstration by dynamic manoeuvres and comparison of the vehicle behaviour with enables and disabled vehicle stability function
	Vehicle stability function is optional equipment	: no
	Vehicle stability function includes directional control	: yes
	Vehicle stability function includes roll-over control	: yes

Series of tests B

2.4.1 Test type 0:

Unladen Engine disconnected	Test speed [km/h]	Braking performance [m/s²]	Force applied to the control [N]
Service brake	65	6.2	270
Axle 1	44.6	3.8	240
Axle 2+3+4	45	1.8	460
Service brake (@3bar)	44.3	3.9	170

No abnormal vibration, vehicle keeps lane

Laden Engine disconnected	Test speed [km/h]	Braking performance [m/s²]	Force applied to the control [N]
Service brake	63.1	5.5	236
Axle 1	40.3	1.8	240
Axle 2+3+4	44.1	3.4	256
Service brake (@3bar)	44.7	2.4	157

No abnormal vibration, vehicle keeps lane

Unladen Engine connected	Test speed [km/h]	Braking performance [m/s²]	Force applied to the control [N]
	27.1	5.9	230
	36.5	5.9	234
	74.5	6.2	240

No abnormal vibration, vehicle keeps lane

Laden Engine connected	Test speed [km/h]	Braking performance [m/s²]	Force applied to the control [N]
	27.3	5.1	190
	34.5	5.1	180
	73.5	5.3	225

No abnormal vibration, vehicle keeps lane

2.4.3 Test type I:

Conditions during the heating : duration of a braking cycle: 60s
No. of brake cycles: 20
Initial speed V1: 60km/h
Final speed V2: 30km/h
deceleration dm: 3m/s²

Laden	Test speed [km/h]	Braking performance [m/s²]	Force applied to the control [N]
Service brake (heated)	61.6	5.0	240

No abnormal vibration, vehicle keeps lane

2.4.4 Test type II

Equivalent test on track : 1,0 m/s²

Braking system(s) used : Engine brake integrated with retarder

2.4.5 Test type IIA

Equivalent test on track : 1,0 m/s²

Braking system(s) used : Engine brake integrated with retarder

2.4.6 Parking brake

Holding force:

Uphill gradient (18%) : 6,5t (forward)
Downhill gradient (18%) : 6,5t (reverse)

2.4.7 Reaction time : 0,6 ≤ 0,6s

2.4.8 Dimensions of flexible pipes : fulfilled
(refer to drawing no. 25.01.20.0024)

2.4.9 Charging time of air reservoirs : fulfilled
T1= 1’ 05’’; T2= 6’ 55’’;T3=8’ 55’’
(vehicles to which the coupling of a trailer is authorized)

2.4.10 Spring brake according to Annex 8 : fulfilled

2.4.11 Compatibility between tractor and trailer : fulfilled

2.4.12 ABS according to Annex 13

General requirements : fulfilled

2.4.13 ABS - Energy consumption : Braking performance @ 40km/h at the 5th full brake with brakes reservoirs isolated: 5.5 m/s²

2.4.14 ABS - Utilization of adhesion :

	k_a [≥0,5]	k_b [≤0,3]	k_a/k_b [≥2,0]
Laden:	0.572	0.128	4.5
Unladen:	0.568	0.146	3.9

	Low grip surface	High grip surface
	ε [≥0,75]	ε [≥0,75]
Laden:	0.99	0.97
Unladen:	0.98	0.82

2.4.15 ABS - Additional checks : fulfilled

2.4.16 ABS - Residual braking performance in event of failure within the electric control transmission :

	Test speed [km/h]	Braking performance [m/s²]	Force applied to the control [N]
Laden:	44.5	5.2	120
Unladen:	44.9	6.2	210

2.4.17 The vehicle fulfils the requirements of Annex 13 : yes

2.4.18 Vehicle equipped to tow trailers equipped with anti-lock systems : yes

2.4.19 The vehicle is subject to the requirements of Annex 5 (ADR) : yes

2.4.20 Vehicle is equipped with a control line(s) according to : paragraphs ~~5.1.3.1.1.~~ / 5.1.3.1.2. / ~~5.1.3.1.3.~~

2.4.21	The vehicle is equipped with a vehicle stability function	: yes Directional control and rollover control in combination with brake activation and engine power output control
	vehicle stability function according to Annex 21:	: fulfilled Test method: demonstration by dynamic manoeuvres and comparison of the vehicle behaviour with enables and disabled vehicle stability function
	Vehicle stability function is optional equipment	: no
	Vehicle stability function includes directional control	: yes
	Vehicle stability function includes roll-over control	: yes

Series of tests C **vehicle with 4th axle lifted up**
(tests results from E3 13R11/16*1828*12)

2.4.1 Test type 0:

Unladen Engine disconnected	Test speed [km/h]	Braking performance [m]	Force applied to the control [N]
Service brake	60	23.6 (<36.7)	238
Axle 1	40	16.9 (<33.8)	170
Axle 2+3	40	22.4 (<33.8)	182

No abnormal vibration, vehicle keeps lane

Laden Engine disconnected	Test speed [km/h]	Braking performance [m]	Force applied to the control [N]
Service brake	60	25.7 (<36.7)	316
Axle 1	40	26.1 (<33.8)	233
Axle 2+3	40	25.2 (<33.8)	207

No abnormal vibration, vehicle keeps lane

Unladen Engine connected	Test speed [km/h]	Braking performance [m]	Force applied to the control [N]
	39	11.1 (<20.5)	277
	65	28.0 (<50.6)	228
	90	52.2 (<91.8)	217

No abnormal vibration, vehicle keeps lane

Laden Engine connected	Test speed [km/h]	Braking performance [m]	Force applied to the control [N]
	39	11.1 (<20.5)	301
	65	28.9 (<50.6)	285
	90	58.9 (<91.8)	259

No abnormal vibration, vehicle keeps lane

2.4.3 Test type I:

Conditions during the heating : duration of a braking cycle: 60s
No. of brake cycles: 20
Initial speed V1: 60km/h
Final speed V2: 30km/h
deceleration dm: 3m/s²

Laden	Test speed [km/h]	Braking performance [m]	Force applied to the control [N]
Service brake (heated)	60	26.6 (<36.8)	110

No abnormal vibration, vehicle keeps lane

2.4.4 Test type II

Equivalent test on track : 1,0 m/s²

Braking system(s) used : Engine brake integrated with retarder

2.4.5 Test type IIA

Equivalent test on track : 1,0 m/s²

Braking system(s) used : Engine brake integrated with retarder

2.4.6 Parking brake : fulfilled

2.4.7 Reaction time : 0,6 ≤ 0,6s

2.4.8 Dimensions of flexible pipes : fulfilled

2.4.9 Charging time of air reservoirs : fulfilled

2.4.10 Spring brake according to Annex 8 : fulfilled

2.4.11 Compatibility between tractor and trailer : fulfilled

2.4.12 ABS according to Annex 13

General requirements : fulfilled

2.4.13 ABS - Energy consumption : Braking performance @ 40km/h at the 5th full brake with brakes reservoirs isolated: 5.5 m/s²

2.4.14 ABS - Utilization of adhesion :

	k_a [≥0,5]	k_b [≤0,3]	k_a/k_b [≥2,0]
Laden:	0.654	0.276	2.369
Unladen:	0.704	0.246	2.862

	Low grip surface	High grip surface
	ε [≥0,75]	ε [≥0,75]
Laden:	0.91	1.04
Unladen:	0.93	1.00

2.4.15 ABS - Additional checks : fulfilled

2.4.16 ABS - Residual braking performance in event of failure within the electric control transmission :

	Test speed [km/h]	Braking performance [m]	Force applied to the control [N]
Laden:	40	20.9 (<52.4)	185
Unladen:	40	35.2 (<52.4)	194

2.4.17 The vehicle fulfils the requirements of Annex 13 : yes

2.4.18 Vehicle equipped to tow trailers equipped with anti-lock systems : yes

2.4.19 The vehicle is subject to the requirements of Annex 5 (ADR) : yes

2.4.20 Vehicle is equipped with a control line(s) according to : paragraphs ~~5.1.3.1.1.~~ / 5.1.3.1.2. / ~~5.1.3.1.3.~~

2.4.21	The vehicle is equipped with a vehicle stability function	: yes Directional control and rollover control in combination with brake activation and engine power output control
	vehicle stability function according to Annex 21:	: fulfilled Test method: demonstration by dynamic manoeuvres and comparison of the vehicle behaviour with enables and disabled vehicle stability function
	Vehicle stability function is optional equipment	: no
	Vehicle stability function includes directional control	: yes
	Vehicle stability function includes roll-over control	: yes
2.5	Remarks	: The added versions have not been considered to be worst cases regarding the tests carried out.

3 Enclosures:

1. Further enclosures (including information documents)	: Information folder/Information document ST_2Y3C_13R_02

4 Statement of conformity:

The information folder as mentioned under No. 0.5 and the type described therein are - in compliance - with the Test Specification mentioned above.

As worst case selection, 2 prototypes have been selected, Fist one having 24/14” brake chambers on first axles, second one having 30/14” brake chambers on first axles. Both prototypes have minim wheelbase and tyres with max R_{DYN}. Prototypes have been equipped with longer pipes in order to simulate the maximum admitted wheelbase during the static tests.

For the present type, the selected test vehicles together with the information documents of remaining variant/version, is representative.

The tests have been carried out, considering the relevant requirements of ISO/IEC 17025:2017.

This report includes pages 1 to 22.
Duplication and publishing in extracts of the Test Report is allowed only by written permission of the Test Laboratory.

TEST LABORATORY

Rezzato, 28.02.2022
ah/aa

File No.: PR-22/0076

A. Adami
Test engineer

E-Mail: aadami@fakt.it
Tel: +39-030-2592700
Fax: +39-030-2590395

INDICE
INDEX

ELENCO ALLEGATI
ATTACHMENTS LIST

Variante / *Variant*	Interasse (1° ÷ 3° asse): / *Wheelbase (1st ÷ 3rd axle):*		Cabina: / *Cab:*	disegno complessivo: / *overall drawing:*		
I??	4200	mm	AS	55.01.03.0031	rev.3	del / *of* 24.11.2015
I??	4200	mm	AD, AT	55.01.03.0032	rev.2	del / *of* 12.01.2015
I??	4500	mm	AS	55.01.03.0033	rev.3	del / *of* 22.04.2015
I??	4500	mm	AD, AT	55.01.03.0034	rev.3	del / *of* 22.04.2015
I??	4800	mm	AS	55.01.03.0035	rev.2	del / *of* 12.01.2015
I??	4800	mm	AD, AT	55.01.03.0036	rev.2	del / *of* 12.01.2015
I??	5100	mm	AS	55.01.03.0037	rev.2	del / *of* 12.01.2015
I??	5100	mm	AD, AT	55.01.03.0038	rev.2	del / *of* 12.01.2015
I??	5500	mm	AD, AT	55.01.03.0126	rev.0	del / *of* 19.07.2018
I??	5700	mm	AS	55.01.03.0039	rev.2	del / *of* 12.01.2015
I??	5700	mm	AD, AT	55.01.03.0040	rev.2	del / *of* 12.01.2015
I??	6050	mm	AS	55.01.03.0041	rev.2	del / *of* 12.01.2015
I??	6050	mm	AD, AT	55.01.03.0042	rev.2	del / *of* 12.01.2015
B??	4200	mm	AS	55.01.03.0113	rev.0	del / *of* 16.05.2018
B??	4200	mm	AD, AT	55.01.03.0114	rev.0	del / *of* 16.05.2018
B??	4500	mm	AS	55.01.03.0115	rev.0	del / *of* 16.05.2018
B??	4500	mm	AD, AT	55.01.03.0116	rev.0	del / *of* 16.05.2018
B??	4800	mm	AS	55.01.03.0117	rev.0	del / *of* 16.05.2018
B??	4800	mm	AD, AT	55.01.03.0118	rev.0	del / *of* 16.05.2018
B??	5100	mm	AS	55.01.03.0119	rev.0	del / *of* 16.05.2018
B??	5100	mm	AD, AT	55.01.03.0120	rev.0	del / *of* 16.05.2018
B??	5700	mm	AS	55.01.03.0121	rev.0	del / *of* 16.05.2018
B??	5700	mm	AD, AT	55.01.03.0122	rev.0	del / *of* 16.05.2018
B??	6050	mm	AS	55.01.03.0123	rev.0	del / *of* 16.05.2018
B??	6050	mm	AD, AT	55.01.03.0124	rev.0	del / *of* 16.05.2018
2?S	4200	mm	AS	55.01.03.0163	rev.0	del / *of* 31.01.2020
2?S	4200	mm	AD, AT	55.01.03.0157	rev.0	del / *of* 31.01.2020
2?S	4500	mm	AS	55.01.03.0164	rev.0	del / *of* 31.01.2020
2?S	4500	mm	AD, AT	55.01.03.0158	rev.0	del / of 31.01.2020
2?S	4800	mm	AS	55.01.03.0165	rev.0	del / *of* 31.01.2020
2?S	4800	mm	AD, AT	55.01.03.0159	rev.0	del / *of* 31.01.2020
2?S	5100	mm	AS	55.01.03.0166	rev.0	del / *of* 31.01.2020
2?S	5100	mm	AD, AT	55.01.03.0160	rev.0	del / *of* 31.01.2020
2?S	5700	mm	AS	55.01.03.0167	rev.0	del / *of* 31.01.2020
2?S	5700	mm	AD, AT	55.01.03.0161	rev.0	del / *of* 31.01.2020
2?S	6050	mm	AS	55.01.03.0168	rev.0	del / *of* 31.01.2020
2?S	6050	mm	AD, AT	55.01.03.0162	rev.0	del / *of* 31.01.2020
4CS	4200	mm	AS	55.01.03.0175	rev.0	del / *of* 31.01.2020
4CS	4200	mm	AD, AT	55.01.03.0169	rev.0	del / *of* 31.01.2020
4CS	4500	mm	AS	55.01.03.0176	rev.0	del / *of* 31.01.2020
4CS	4500	mm	AD, AT	55.01.03.0170	rev.0	del / *of* 31.01.2020
4CS	4800	mm	AS	55.01.03.0177	rev.0	del / *of* 31.01.2020
4CS	4800	mm	AD, AT	55.01.03.0171	rev.0	del / *of* 31.01.2020
4CS	5100	mm	AS	55.01.03.0178	rev.0	del / *of* 31.01.2020
4CS	5100	mm	AD, AT	55.01.03.0172	rev.0	del / *of* 31.01.2020
4CS	5700	mm	AS	55.01.03.0179	rev.0	del / *of* 31.01.2020
4CS	5700	mm	AD, AT	55.01.03.0173	rev.0	del / *of* 31.01.2020
4CS	6050	mm	AS	55.01.03.0180	rev.0	del / *of* 31.01.2020
4CS	6050	mm	AD, AT	55.01.03.0174	rev.0	del / *of* 31.01.2020

disegno sospensione asse aggiunto sterzante: / *suspension drawing of added steering axle:*		
10.03.00.0042	rev.2	del / *of* 22.12.2015
10.03.00.0048	rev.0	del / *of* 27.10.2014
10.03.00.0058	rev.0	del / *of* 09.08.2018
10.03.00.0063	**rev.0**	**del / of 16.01.2021**
10.03.00.0064	**rev.0**	**del / of 16.01.2021**
10110001	rev.1	del / *of* 26.04.2018

schema impianto frenante, con sollevatore 2° asse, con rimorchiabile: *brake system layout drawing, with retractable 2nd axle, towing vehicle:*	25.01.20.0024, pag. 1	rev.4	del / *of* 13.07.2020
schema impianto frenante, con sollevatore 2° asse, senza rimorchiabile: *brake system layout drawing, with retractable 2nd axle, no towing vehicle:*	25.01.20.0024, pag. 2	rev.4	del / *of* 13.07.2020
schema impianto pneumatico, con sollevatore 2° asse: *pneumatic system layout drawing, with retractable 2nd axle:*	25.01.20.0024, pag. 3 e 4	rev.4	del / *of* 13.07.2020
schema impianto frenante, senza sollevatore 2° asse, con rimorchiabile: *brake system layout drawing, without retractable 2nd axle, towing vehicle:*	25.01.20.0031, pag. 1	rev.4	del / *of* 13.07.2020
schema impianto frenante, senza sollevatore 2° asse, senza rimorchiabile: *brake system layout drawing, without retractable 2nd axle, no towing vehicle:*	25.01.20.0031, pag. 2	rev.4	del / *of* 13.07.2020
schema impianto pneumatico, senza sollevatore 2° asse: *pneumatic system layout drawing, without retractable 2nd axle:* *pneumatic system layout drawing, with retractable 2nd axle:*	25.01.20.0031, pag. 3 e 4	rev.4	del / *of* 13.07.2020
pinza freno 2° asse: *brake pad of 2nd axle:*	Z002709	rev. 008	del / *of* 03.05.2002

0. **DATI GENERALI**
GENERAL

0.1. Marca (denominazione commerciale del costruttore):
Make (trade name of manufacturer):
Iveco / System Truck

0.2. Tipo:
Type:
ST 2Y3C 13R

Varianti:
Variants:
vedere allegati n° 0.0 e 0.1
see annex No. 0.0 and 0.1

Versioni:
Versions:
vedere allegati n° 0.0 e 0.1
see annex No. 0.0 and 0.1

0.2.1. Eventuale/i designazione/i commerciale/i:
Commercial name(s) (if available):

AD opp./*or* AT 260SY/FP CM, …/FP D, …/FS CM, …/FS D, …/P, …/PS, …/PT, …/FP, …/FS
AS 260SY/FP CM, …/FP GV, …/FS CM, …/FS GV, …/P, …/PS …/FP, …/FS
AS 260SY/FS CM NG, …/FS CM CNG, …/FS CM LNG, …/PS NG, …/PS CNG, …/PS LNG, …/FS NG, …/FS CNG, …/FS LNG
AT opp./*or* AD 260SY/PS NG, …/PS CNG, …/PS LNG, …/FS NG, …/FS CNG, …/FS LNG
AD, AT opp./*or* AS 260Y/PS, …HR
AD, AT opp./*or* AS 280XY/PS, …HR

0.3. Mezzi di identificazione del tipo, se marcati sul veicolo:
Means of identification of type, if marked on the vehicle:
numero di omologazione del tipo su targhetta
type approval number on manufacturer's plate

0.3.1. Posizione della marcatura:
Location of that marking:
targhetta adesiva su parete frontale, dietro griglia radiatore in prossimità della targhetta costruttore
adhesive plate on the front wall behind radiator grill near manufacturer's plate

0.4. Categoria del veicolo:
Category of vehicle:
N3

0.5. Nome e indirizzo del costruttore:
Name and address of manufacturer:

(fase 1) / *(stage 1)*
Iveco Magirus AG
D-89070 Ulm

(fase 2) / *(stage 2)*
S.T. System Truck S.p.A.
I-46048 Roverbella (MN) - Via Paesa, 28

0.8. Den./i e indirizzo/i dello/gli stabilimento/i di montaggio:
Name(s) and address(es) of assembly plant(s):
S.T. System Truck S.p.A.
I-46048 Roverbella (MN) - Via Paesa, 28

S.T. System Truck S.p.A.
E-28850 Torrejón de Ardoz (Madrid), c/Cobre, 15

0.9. Denominazione e indirizzo dell'(eventuale) rappresentante del costruttore:
Name and address of the manufacturer's representative (if any):
non ricorre
not applicable

0.10. Posizione e modalità di fissaggio del marchio di omologazione sul veicolo:
Location and method of attachment of approval mark on the vehicle:
targhetta adesiva su parete frontale, dietro griglia radiatore in prossimità della targhetta costruttore fase 2
adhesive plate on the front wall behind radiator grill near manufacturer's plate (stage 2)

1. **CARATTERISTICHE COSTRUTTIVE GENERALI DEL VEICOLO**
GENERAL CONSTRUCTION CHARACTERISTICS OF THE VEHICLE

1.1. Fotografie e/o disegni di un veicolo rappresentativo:
Photographs and/or drawings of a representative vehicle:
vedere allegato n° 1
see annex Nr. 1

Fotografia ¾ anteriore
Photo ¾ front

Fotografia ¾ posteriore
Photo ¾ rear

varianti - versioni: I?? - ??????????????????? ?
variants - versions: B?? - ??????????????????? ?

Fotografia ¾ anteriore
Photo ¾ front

Fotografia ¾ posteriore
Photo ¾ rear

varianti - versioni: 2?? - ??????????????????? ?
variants - versions: 4?? - ??????????????????? ?

1.3.	Numero di assi e di ruote: *Number of axles and wheels:*	4 *4*	assi, *axles,*	**10** ***10***	ruote *wheels*
1.3.1.	Numero e posizione degli assi a ruote gemellate: *Number and position of axles with twin wheels:*	1 *1*	asse, *axle,*	3° *3rd*	asse *axle*
1.3.3.	Assi motore (numero, posizione, interconnessione): *Powered axles (number, position, interconnection):*	vedere allegato n° 1 *see annex Nr. 1*			
1.8.	Lato di guida: *Hand of drive:*	a sinistra *left*	oppure *or*	a destra *right*	
1.8.1.	Il veicolo è predisposto per la circolazione stradale: *Vehicle is equipped to be driven in:*	a destra *right hand traffic*	oppure *or*	a sinistra *left hand traffic*	

2. **MASSE E DIMENSIONI** (in kg e mm)
MASSES AND DIMENSIONS *(in kg and mm)*
(eventualmente con riferimento ai disegni)
(refer to drawing where applicable)

2.1. Interasse o interassi (a pieno carico)
Wheelbase(s) (fully loaded)

2.1.1. Veicoli a 2 assi: non ricorre
Two axle vehicles: *not applicable*

2.1.1.1 Veicoli a 3 o più assi: ricorre
Vehicles with three or more axles: *applicable*

2.1.1.1.1	Distanza tra assi consecutivi, da quello in posizione più avanzata a quello in posizione più arretrata: *Axle spacing between consecutive axles going from the foremost to the rearmost axle:*	vedere allegato n° *see annex Nr. 2*	2
2.1.1.2.	Distanza totale tra gli assi: *Total axle spacing:*	vedere allegato n° 2 *see annex Nr. 2*	
2.2	Ralla *Fifth wheel*		
2.2.2	Veicoli trattori di semirimorchi: *In case of semi-trailer towing vehicles:*	non ricorre *not applicable*	
2.3.1.	Carreggiata di ciascun asse sterzante: *Track of each steered axle:*	vedere allegato n° 2 *see annex Nr. 2*	
2.3.2.	Carreggiata di tutti gli altri assi: *Track of all other axles:*	vedere allegato n° 2 *see annex Nr. 2*	
2.6.	Massa del veicolo carrozzato, con il dispositivo di accoppiamento se veicolo trattore di categoria diversa dalla categoria M1, in ordine di marcia, oppure massa del telaio cabinato qualora il costruttore non fornisca la carrozzeria e/o il dispositivo di accoppiamento [compresi liquido refrigerante, lubrificanti, carburante, 100 % di altri liquidi, escluse le acque usate, attrezzi, ruota di scorta e conducente e, nel caso degli autobus, la massa di una seconda persona (75 kg) se nel veicolo è previsto per essa un apposito sedile]: (massima e minima): *Mass of the vehicle with bodywork, and with coupling device in the case of a towing vehicle of category other than M1 in running order, or mass of the chassis with cab if the manufacturer does not fit the bodywork and/or coupling device (including coolant, oils, fuel, 100 % other liquids except used waters, tools, spare wheel and driver and, for buses and coaches, the mass of the crew member (75 kg) if there is a crew seat in the vehicle): (maximum and minimum):*	minima: 8520 massima: 9970 *minimum: 8520* *maximum: 9970*	
2.6.1.	Distribuzione di tale massa tra gli assi e, nel caso di un semirimorchio o di un rimorchio ad asse centrale, carico gravante sul punto di aggancio (massima e minima per ogni variante): *Distribution of this mass among the axles and, in the case of a semitrailer or centre-axle trailer, load on the coupling point (maximum and minimum for each variant):*	1° / 2° + 3° + 4° minima: 4714 / 3806 massima: 5130 / 4840 *minimum: 4714 / 3806* *maximum: 5130 / 4840*	
2.7.	Massa minima del veicolo completo dichiarata dal costruttore, nel caso di un veicolo incompleto: *Minimum mass of the completed vehicle as stated by the manufacturer, in the case of an incomplete vehicle:*	vedere allegato n° 2 *see annex Nr. 2*	
2.7.1.	Ripartizione di tale massa sugli assi e, nel caso di un semirimorchio o di un rimorchio ad asse centrale, carico gravante sul punto di accoppiamento: *Distribution of this mass among the axles and, in the case of semitrailer or centre-axle trailer, load on the coupling point:*	vedere allegato n° 2 *see annex Nr. 2*	
2.8.	Massa massima a pieno carico tecnicamente ammissibile dichiarata dal costruttore: *Technically permissible maximum laden mass stated by the manufacturer:*	35000 *35000*	

2.8.1.	Distribuzione di tale massa tra gli assi e, per semirimorchi o rimorchi ad asse centrale, carico gravante sul punto di traino: *Distribution of this mass among the axles and, in the case of a semi-trailer or centre-axle trailer, load on the coupling point:*	1°: max 9000 2°: max 7500 3°: max 12000 4°: max 8000	
2.9.	Carico/massa massima tecnicamente ammissibile su ciascun asse: *Technically permissible maximum mass on each axle:*	vedere allegato n° 2 *see annex Nr. 2*	
2.10.	Carico/massa massima tecnicamente ammissibile su ciascun gruppo di assi: *Technically permissible maximum load/mass on each axle group:*	vedere allegato n° 2 *see annex Nr. 2*	
2.11.	Massa massima rimorchiabile tecnicamente ammissibile del veicolo a motore in caso di *Technically permissible maximum towable mass of the motor vehicle in case of*		
2.11.1.	- rimorchio a timone: *- drawbar trailer:*	vedere allegato n° 2 *see annex Nr. 2*	
2.11.2.	- semirimorchio: *- semi-trailer:*	non ricorre *not applicable*	
2.11.3.	- rimorchio ad asse centrale: *- centre-axle trailer:*	vedere allegato n° 2 *see annex Nr. 2*	
2.11.4.	Massa massima tecnicamente ammissibile a pieno carico del veicolo combinato: *Technically permissible maximum laden mass of the combination:*	**vedere allegato n° 2** ***see annex Nr. 2***	
2.11.6.	Massa massima del rimorchio non frenato: *Maximum mass of unbraked trailer:*	vedere allegato n° 2 *see annex Nr. 2*	
2.12.	Carico verticale statico/massa massima tecnicamente ammissibile sul punto di aggancio *Technically permissible maximum static vertical load/mass on the vehicle's coupling point*		
2.12.1.	- del veicolo a motore: *- of the motor vehicle:*	vedere allegato n° 2 *see annex Nr. 2*	
3.	**CONVERTITORE DELL'ENERGIA DI PROPULSIONE** ***PROPULSION ENERGY CONVERTER***		
3.1.	Costruttore del convertitore o dei convertitori dell'energia di propulsione: *Manufacturer of the propulsion energy converter(s):*	FPT Industrial S.p.A.	
3.1.1	Codice motore del costruttore quale apposto sul motore: *Manufacturer's engine code as marked on the engine:*	**vedere allegato n°** ***see annex Nr. 3***	**3**
3.2.	Motore a combustione interna *Internal combustion engine*		
3.2.1.1.	Principio di funzionamento: *Working principle:*	vedere allegato n° 3 *see annex Nr. 3*	
	Ciclo: *Cycle:*	quattro tempi *four stroke*	
3.2.1.9.	Regime massimo ammesso dichiarato dal costruttore: *Maximum permitted speed as prescribed by the manufacturer:*	vedere allegato n° 3 *see annex Nr. 3*	
3.2.5.	Impianto elettrico *Eletcrical system*		

3.2.5.1. Tensione nominale: 24 V, terminale a massa: negativo
Rated voltage: V, ground: negative

3.2.5.2. Generatore
Generator

3.2.5.2.1. Tipo: Alternatore
Type: Alternator

3.2.5.2.2. Potenza nominale: 1120 ÷ 3360 VA
Nominal output:

3.3. Motore elettrico
Electric motor

3.3.1. Tipo (avvolgimento, eccitazione): non ricorre
Type (winding, excitation): not applicable

3.3.1.1. Potenza oraria massima: non ricorre
Maximum hourly output: not applicable

3.3.1.2. Tensione di esercizio: non ricorre
Operating voltage: not applicable

3.3.2. Batteria
Battery

3.3.2.2. Massa: non ricorre
Mass: not applicable

3.3.2.4. Ubicazione: non ricorre
Position: not applicable

3.4. Altri motori o propulsori o loro combinazioni (indicazione degli elementi di questi tipi di motori): non ricorre
Other engines or motors or combinations thereof (particulars regarding the parts of such engines or motors): not applicable

4. **TRASMISSIONE**
TRANSMISSION

4.2. Tipo di trasmissione (meccanica, idraulica, elettrica, ecc.): 3° asse interconnessione meccanica oppure 1° asse idraulica e 3° asse meccanica
Type (mechanical, idraulic, electric,…): 3rd axle mechanical interconnection or 1st axle hydraulic and 3rd axle mechanical

4.6. Rapporti di trasmissione: vedere allegato n° 4
Gear ratios: see annex Nr. 4

Marcia *Gear*	Rapporti del cambio (rapporti tra il numero di giri dell'albero motore e quelli dell'albero secondario del cambio) *Internal gearbox ratios (ratios of engine to gearbox output shaft revolutions)*	Rapporto(i) finale/i (rapporto tra il numero di giri dell'albero secondario e quelli delle ruote motrici) *Final drive ratio(s) (ratio of gearbox output shaft to driven wheel revolutions)*	Rapporti totali di trasmissione *Total gear ratios*
Massimo per cambio continuo (1) *Maximum for CVT (1)*			
1			
2			
3			
…			
Minimo per cambio continuo (1) *Minimum for CVT (1)*			

Retromarcia *Reverse*			

([1]) Trasmissione cambio continuo. *Continuously variable transmission.*

4.7. Velocità massima di progetto del veicolo: max 90 km/h con limitatore di velocità
Maximum vehicle design speed: *with speed limiting device*

5. **ASSI**
AXLES

5.4. Posizione dello/gli asse/i sollevabile/i: vedere allegato n° 5
Position of retractable axle(s): *see annex Nr. 5*

6. **SOSPENSIONE**
SUSPENSION

6.1. Disegno dei dispositivi di sospensione:
Drawing of the suspension arrangements:

1° asse: originale Iveco
1st axle: original Iveco

2° asse: **vedere allegato n° 6**
2nd axle: see annex Nr. 6

3° asse: originale Iveco
3rd axle: original Iveco

4° asse: originale Iveco
4th axle: original Iveco

6.2. Tipo e modello della sospensione di ciascun asse o ruota:
Type and design of the suspension of each axle or wheel:

1°: sospensione meccanica o pneumatica, ammortizzatori idraulici
mechanical suspension or air suspension, hydraulic shock absorbers

2°: **sospensione pneumatica, ammortizzatori idraulici, vedere allegato n° 6**
air suspension, hydraulic shock absorbers, see annex Nr. 6

3°: sospensione pneumatica, ammortizzatori idraulici
air suspension, hydraulic shock absorbers

4°: sospensione pneumatica, ammortizzatori idraulici
air suspension, hydraulic shock absorbers

6.6. Pneumatici e ruote
Tyres and wheels

6.6.1. Combinazione/i pneumatico/cerchione:
Tyre/wheel combination(s):

a) per gli pneumatici indicare la designazione della misura, l'indice della capacità di carico, il simbolo della categoria di velocità ed eventualmente la resistenza al rotolamento ai sensi della norma ISO 28580
a) for tyres indicate size designation, load-capacity index, speed category symbol, rolling resistance in accordance with ISO 28580 (where applicable)

b) per le ruote, indicare dimensioni del cerchione e dati della campanatura
b) for wheels indicate rim size(s) and off-set(s)

6.6.1.1. Assi
Axles

6.6.1.1.1.	Asse 1: *Axle 1:*	vedere allegato n° 6 *see annex Nr. 6*
6.6.1.1.2.	Asse 2: *Axle 2:*	vedere allegato n° 6 *see annex Nr. 6*
6.6.1.1.3.	Asse 3: *Axle 3:*	vedere allegato n° 6 *see annex Nr. 6*
6.6.1.1.4.	Asse 4: *Axle 4:*	vedere allegato n° 6 *see annex Nr. 6*
6.6.2.	Limiti superiori e inferiori del raggio di rotolamento: *Upper and lower limits of rolling radii:*	
6.6.2.1.	Asse 1: *Axle 1:*	vedere allegato n° 6 *see annex Nr. 6*
6.6.2.2.	Asse 2: *Axle 2:*	vedere punto 6.6.2.1. *see point 6.6.2.1.*
6.6.2.3.	Asse 3: *Axle 3:*	vedere punto 6.6.2.1. *see point 6.6.2.1.*
6.6.2.4.	Asse 4: *Axle 4:*	vedere punto 6.6.2.1. *see point 6.6.2.1.*
6.6.3.	Pressione/i degli pneumatici raccomandata/e dal costruttore del veicolo: *Tyre pressure(s) as recommended by the vehicle manufacturer:*	
6.6.3.1.	1° asse: *1st axle:*	vedere punto 6.6.2.1. *see point 6.6.2.1.*
6.6.3.2.	2° asse: *2nd axle:*	vedere punto 6.6.2.1. *see point 6.6.2.1.*
6.6.3.3.	3° asse: *3rd axle:*	vedere punto 6.6.2.1. *see point 6.6.2.1.*
6.6.3.4.	Asse 4: *Axle 4:*	vedere punto 6.6.2.1. *see point 6.6.2.1.*
6.6.5.	Breve descrizione dell'eventuale unità di scorta per uso temporaneo: *Brief description of temporary-use spare unit, if any:*	non ricorre *not applicable*
8.	**FRENI** ***BRAKES***	
8.1.	Tipo e caratteristiche dei freni, conformemente al punto 2.6 del Regolamento UNECE 13) con uno schema dimensionale inclusi dati e disegni dei tamburi, dei dischi, dei tubi, marca e tipo delle ganasce/pastiglie e/o guarnizioni, superfici frenanti effettive, raggio dei tamburi, delle ganasce o dei dischi, massa dei tamburi, dei dispositivi di regolazione, delle parti interessate dello/gli asse/i e della sospensione): *Type and characteristics of the brakes as defined in point 2.6 of Regulation UNECE 13 including details and drawings of the drums, discs, hoses make and type of shoe/pad assemblies and/or linings, effective braking areas, radius of drums, shoes or discs, mass of drums, adjustment devices, relevant parts of the axle(s) and suspension:*	

1° asse: invariato rispetto al veicolo base, con omologazione:
E3*13R11/16*1819*13 del 02.07.2021
- freno a disco Ø432 mm, spessore 45 mm
- brake chamber combinato con molla: 24/14" opp. 30/14"
- guarnizioni freni: Ferodo 4550, Ferodo 3475 F, Galfer G 3358, Textar T 3030, Textar T 3008, Jurid 424, Jurid 539 oppure Pagid 202

1st axle: unchanged, respect to stage I vehicle, with approval:
E3 13R-11 1819 12 of 10.05.2018
- disc brake: Ø432 mm, width 45 mm
- brake chamber combined with spring: 24/14" or 30/14"
- brake linings: Ferodo 4550, Ferodo 3475 F, Galfer G 3358, Textar T 3030, Textar T 3008, Jurid 424, Jurid 539 oppure Pagid 202

2° asse:
- pinze Knorr Bremse SN7052 oppure SN7042 disegno Knorr Bremse n° Z002709 del 03.05.2002
- freno a disco Ø432 mm, spessore 45 mm
- area della pastiglia: min 196 cm^2, spessore 21 mm
- brake chamber: 12"
- guarnizioni freni: Ferodo 4550, Ferodo 3475 F, Galfer G 3358, Textar T 3030, Textar T 3008, Jurid 424, Jurid 539 oppure Pagid 202

2nd axle:
- brake pad Knorr Bremse SN7052 or SN7042 Knorr Bremse drawing No. Z002709 of 03.05.2002
- disc brake: Ø432 mm, width 45 mm
- pad area: min 196 cm^2, width 21 mm
- brake chamber: 12"
- brake linings: Ferodo 4550, Ferodo 3475 F, Galfer G 3358, Textar T 3030, Textar T 3008, Jurid 424, Jurid 539 oppure Pagid 202

3° asse: invariato rispetto al veicolo base, con omologazione:
E3*13R11/16*1819*13 del 02.07.2021
- freno a disco Ø432 mm, spessore 45 mm
- brake chamber combinato con molla: 20/24"
- guarnizioni freni: Ferodo 4550, Ferodo 3475 F, Galfer G 3358, Textar T 3030, Textar T 3008, Jurid 424, Jurid 539 oppure Pagid 202

3rd axle: unchanged, respect to stage I vehicle, with approval:
E3 13R-11 1819 12 of 10.05.2018
- disc brake: Ø432 mm, width 45 mm
- brake chamber combined with spring: 20/24"
- brake linings: Ferodo 4550, Ferodo 3475 F, Galfer G 3358, Textar T 3030, Textar T 3008, Jurid 424, Jurid 539 oppure Pagid 202

4° asse: invariato rispetto al veicolo base, con omologazione:
E3*13R11/16*1819*13 del 02.07.2021
- freno a disco Ø432 mm, spessore 45 mm
- brake chamber: 14" oppure 12"
- guarnizioni freni: Ferodo 4550, Ferodo 3475 F, Galfer G 3358, Textar T 3030, Textar T 3008, Jurid 424, Jurid 539 oppure Pagid 202

4th axle: unchanged, respect to stage I vehicle, with approval:
E3 13R-11 1819 12 of 10.05.2018
- disc brake: Ø432 mm, width 45 mm
- brake chamber: 14" or 12"
- brake linings: Ferodo 4550, Ferodo 3475 F, Galfer G 3358, Textar T 3030, Textar T 3008, Jurid 424, Jurid 539 oppure Pagid 202

8.2. Curva di funzionamento, descrizione e/o disegno dei sistemi di frenatura descritti al punto 2.3 del Regolamento UNECE 13, compresi dati e disegni della trasmissione e dei dispositivi di comando:

invariato rispetto al veicolo base, con omologazione:
E3*13R11/16*1819*13 del 02.07.2021

	Operating diagram, description and/or drawing of the braking systems described in point 2.3 of Regulation UNECE 13 including details and drawings of the transmission and controls:	*unchanged, respect to stage I vehicle, with approval:* ***E3 13R-11 1819 12 of 10.05.2018***
8.2.1.	Impianto frenante di servizio: *Service braking system:*	vedere allegato n° 7 *see annex Nr. 7*
8.2.2.	Impianto frenante di soccorso: *Secondary braking system:*	conglobato con il freno di servizio, per sdoppiamento di sezioni *included with service braking system, for splitting of sections*
8.2.3.	Impianto del freno di stazionamento: *Parking braking system:*	meccanico a molla, agente su: 1° e 3° asse trasmissione: pneumatica e con comando: a mano *by the spring-brake actuator of the: axles 1st and 3rd* *transmission: pneumatic* *and control: hand*
8.2.4.	Eventuali impianti frenanti complementari: *Any additional braking system:*	- freno motore con comando indipendente - optional rallentatore idraulico - obbligo del rallentatore idraulico con equipaggiamento di cambio automatico - con rallentatore idraulico per veicoli CNG/LNG - sistema ACC (controllo adattativo della velocità) *- exhaust brake with separate control* *- optional hydraulic retarder* *- hydraulic retarder compulsory with automatic gear box equipment* *- with hydraulic retarder for CNG/LNG vehicles* *- ACC system (adaptive cruise control)*
8.2.5.	Impianto frenante d'emergenza in caso di distacco accidentale del rimorchio: *Break-away braking system:*	ricorre *applicable*
8.3.	Comando e trasmissione degli impianti frenanti del rimorchio in veicoli destinati al traino di un rimorchio: - pressione alla condotta dell'automatico: - pressione alla condotta del moderabile: *Control and transmission of trailer braking systems in vehicles designed to tow a trailer:* *- reservoir pressure at coupling head:* *- braking pressure at coupling head:*	vedere punto 8.2.1. 8,5 - 0,3 bar 8,5 - 0,3 bar *see point 8.1.* *8,5 - 0,3 bar* *8,5 - 0,3 bar*
8.4.	Veicolo è predisposto per il traino di un rimorchio dotato di sistema pneumatico di frenatura di servizio: *Vehicle is equipped to tow a trailer with pneumati service brakes:*	sì *yes*
8.5.	Sistema antibloccaggio: *Anti-lock braking system:*	sì categoria 1 *yes category 1*
8.5.1.	Per i veicoli muniti di sistemi di frenatura antibloccaggio, descrizione del funzionamento del sistema (compresi eventuali elementi elettronici), curva del bloccaggio elettrico e schema del circuito idraulico o pneumatico: *For vehicles with anti-lock braking systems, description of system operation (including any electronic parts), electric block diagram, hydraulic or pneumatic circuit plan:*	invariato rispetto al veicolo base, con omologazione: **E3*13R11/16*1819*13 del 02.07.2021** *unchanged, respect to stage I vehicle, with approval:* ***E3 13R-11 1819 12 of 10.05.2018***
8.6.	Calcoli e curve conformemente al Regolamento UNECE 13 o all'appendice all'allegato 14, se applicabile: *Calculation and curves according to UNECE Regulation 13 or to the Appendix to Annex 14 thereto if applicable:*	non ricorre *not applicable*
8.7.	Descrizione e/o disegno del sistema di alimentazione di energia, da indicare anche nel caso dei sistemi di frenatura servoassistiti:	

	Description and/or drawing of the energy supply, also to be specified for power-assisted braking systems:	compressore monocilindrico (352 cm^3) oppure bicilindrico (460 - 630 cm^3), con portata $\geq$ 550 l/min alla velocità del motore di 1900 ÷ 2400 min^{-1} *single-cylinder (352 cm^3) or twin-cylinder (460 - 630 cm^3) compressor, with delivery rate $\geq$ 550 l/min, at engine speed 1900 ÷ 2400 min^{-1}*
8.7.1.	Nel caso di sistemi ad aria compressa, pressione di esercizio p_2 nel o nei serbatoi: *In the case of compressed-air braking systems, working pressure p_2 in the pressure reservoir(s):*	10,5 + 0,2 bar oppure / *or* 12,5 ± 0,2 bar oppure / *or* 11,0 ± 0,2 bar oppure / *or* 10,0 ÷ 12,5 bar
8.7.2.	Nel caso di sistemi di frenatura a depressione, livello iniziale di energia nel o nei serbatoi: *In the case of vacuum braking systems, the initial energy level in the reservoir(s):*	non ricorre *not applicable*
8.8.	Calcolo del sistema di frenatura: determinazione del rapporto tra la somma delle forze frenanti alla periferia delle ruote e le forze esercitate sul comando del freno: *Calculation of the braking system: determination of the ratio between the total braking forces at the circumference of the wheels and the force applied to the braking control:*	- per 2° asse vedere allegato n° 7 **- per gli altri assi, vedere omol.: E3*13R11/16*1819*13 del 02.07.2021** *- for 2nd axle see annex Nr. 7* ***- for the other axles, see approval: E3*13R11/16*1819*13 of 02.07.2021***
8.9.	Breve descrizione dell'impianto frenante ai sensi del punto 1.6 dell'addendum all'appendice 1 del'allegato IX della direttiva 71/320/CEE): *Brief description of the braking systems (according to item 1,6 of the Addendum to Appendix 1 of Annex IX to Directive 71/320/EEC):*	vedere punto 8.2.1. *see point 8.2.1.*
8.10.	Se viene richiesta l'esenzione dalle prove di tipo I e/o di tipo II o di tipo III, indicare il numero del verbale conformemente all'appendice 3 dell'allegato 11 al Regolamento UNECE 13: *If claiming exemptions from the Type I and/or Type II or Type III tests, state the number of the report in accordance with Appendix 3 of Annex 11 to UNECE Regulation 13:*	non ricorre *not applicable*
8.11.	Dati del tipo o dei tipi di sistemi di frenatura elettronica (EBS): *Particulars of the type(s) of endurance braking system(s) (EBS):*	vedere punto 8.5.1. *see point 8.5.1.*

Revisione *Revision* 0 del *of* 03.02.2022

x La Ditta

.....

(ing. Paolo MARTINI)

ST SYSTEM TRUCK s.p.a.
Via Piave, 28 - 46048 ROVERBELLA (MN) ITALY
C.F. 02209770797 - P.IVA: 03117430235
tel. +39.0376.696809
e-mail: info@stsystemtruck.com
PEC: stsystemtruck@legalmail.it

Ruolo: Direttore tecnico
Position: Tecnical Director

CHIAVE INTERPRETAZIONE VARIANTI E VERSIONI
VARIANTS AND VERSIONS EXPLANATION KEY

Caratteristiche *Characteristics*	Descrizione *Description*	Tipo *Type*		Varianti *Variants*			Versioni *Versions*														
Nome costruttore *Manufacturer's company name*	Iveco / S.T. System Truck S.p.A.	ST																			
Tipo di veicolo della fase I, progettazione e costruzione del telaio, categoria, numero di assi *Type of stage I, design and construction, category, number of axles*	A260 / A280, autotelaio (carro), cat. N3, 4 assi *A260 / A280, chassis (truck), cat. N3, 4 axles*		2Y3C																		
Fase di completamento *Extent of build*	incompleto *incomplete*			I																	
	incompleto X-Way *incomplete X-Way*			B																	
	incompleto S-Way MY2019 e MY2021 *incomplete S-Way MY2019 and MY2021*			2																	
	incompleto X-Way MY2019 e MY2021 *incomplete X-Way MY2019 and MY2021*			4																	
Numero assi sterzanti *Number steering axle*	2 (1° e 2° asse / *1st and 2nd axle*)				A																
	3 (1°, 2° e 4° asse / *1st, 2nd and 4th axle*)				C																
Principio di funzionamento *Working principle*	accensione spontanea *compression ignition*					S															
	accensione comandata *positive ignition*					C															
Cilindrata *Engine capacity*	12900 cm^3						G3														
	8710 cm^3						09														
	11120 cm^3						11														
	12882 cm^3						12														
Interasse (1° ÷ 3° asse) *Wheelbase (1st ÷ 3rd axle)*	4200 mm							CB													
	4500 mm							DB													
	4800 mm							EB													
	5100 mm							FB													
	5500 mm							LB													
	5700 mm							GB													
	6050 mm							HB													

CHIAVE INTERPRETAZIONE VARIANTI E VERSIONI
VARIANTS AND VERSIONS EXPLANATION KEY

Caratteristiche *Characteristics*	Descrizione *Description*	Tipo *Type*	Varianti *Variants*	Versioni *Versions*
Direttiva emissioni *Directive emission*	Euro VI D			D
	Euro VI E			**E**
	Euro VI D EGR			L
Tipo cabina *Cab type*	AD			D
	AT			T
	AS			S
Potenza del motore *Engine power*	200 kW			T
	228 kW			Z
	243 kW			A
	250 kW			U
	251 kW			**W**
	265 kW			B
	294 kW			V
	309 kW			C
	338 kW			E
	353 kW			F
	357 kW			**X**
	375 kW			R
	390 kW			**Y**
	419 kW			S
Tipo 3° asse *3rd axle type*	SR			S
	HR			H
Massa massima su 1° asse *Maximum mass on 1st axle*	9000 kg			90
	8600 kg			86
	8000 kg			80
	7500 kg			75
	7100 kg			71
	6700 kg			67
Massa massima su 3° asse *Maximum mass on 3rd axle*	12000 kg			B2
	11500 kg			11

CHIAVE INTERPRETAZIONE VARIANTI E VERSIONI
VARIANTS AND VERSIONS EXPLANATION KEY

Caratteristiche *Characteristics*	**Descrizione** *Description*	**Tipo** *Type*	**Varianti** *Variants*	**Versioni** *Versions*																	
4° asse *4th axle*	sollevabile / *liftable*															A					
	sollevabile e sterzante / *liftable and steering*															B					
Massa massima su 4° asse *Maximum mass on 4th axle*	8000 kg																80				
	7500 kg																75				
	7100 kg																71				
	6700 kg																67				
Uscita gas di scarico *Exhaust exit*	laterale sinistra / *side left*																	S			
	verticale / *vertical*																	V			
	centrale / *centre*																	C			
Tipo di cambio *Type of gear*	manuale / *manual*																		M		
	automatico / *automatic*																		A		
Interasse (2° ÷ 3° e 3° ÷ 4° asse) *Wheelbase (2nd ÷ 3rd and 3rd ÷ 4th axle)*	2° ÷ 3°: 1365 mm - 3° ÷ 4°: 1395 mm																		P		
	2° ÷ 3°: 1320 mm - 3° ÷ 4°: 1395 mm																		Q		
	2° ÷ 3°: 1410 mm - 3° ÷ 4°: 1395 mm																		R		
ADR	con ADR / *with ADR*																			S	
	con ADR classe AT / *with ADR class AT*																			T	
	senza ADR / *without ADR*																			N	
Sistema di frenatura *Braking system*	manuale / manual																				F
	EBS, senza rimorchiabile / *EBS, no towing vehicle*																				N
Configurazione S.T. *S.T. configuration*	2° asse sollevabile / *retractable 2nd axle*																				A
	2° asse non sollevabile (con o senza rallenatore Telma AD72-00) *not retractable 2nd axle (with or without Telma AD 72-00 retarder)*																				B

COMBINAZIONI POSSIBILI
PERMISSIBLE COMBINATION

Varianti / *Variants*	Versioni / *Versions*																	
I C S	0	9	CB	D	D	Z	S	75	B2	B	80	S	M	P	S	F		A
			DB		T	A		80				V		Q	T	N		B
			EB			B		86				C		R	N			
			FB			V		90										
			GB															
			HB															
I C S	0	9	CB	D	D	Z	S	75	B2	B	75	S	M	P	S	F		A
			DB		T	A		80	11			V		Q	T	N		B
			EB			B		86				C		R	N			
			FB			V		90										
			GB															
			HB															
I C S	0	9	CB	D	D	Z	S	71	B2	B	71	S	M	P	S	F		A
			DB		T	A			11			V		Q	T	N		B
			EB			B						C		R	N			
			FB			V												
			GB															
			HB															
I C S	0	9	CB	D	D	Z	S	67	B2	B	67	S	M	P	S	F		A
			DB		T	A			11			V		Q	T	N		B
			EB			B						C		R	N			
			FB			V												
			GB															
			HB															
I C S	0	9	CB	D	D	Z	S	75	B2	B	80	S	A	P	S	F		A
			DB		T	A		80				V		Q	T	N		B
			EB			B		86				C		R	N			
			FB					90										
			GB															
			HB															
I C S	0	9	CB	D	D	Z	S	75	B2	B	75	S	A	P	S	F		A
			DB		T	A		80	11			V		Q	T	N		B
			EB			B		86				C		R	N			
			FB					90										
			GB															
			HB															
I C S	0	9	CB	D	D	Z	S	67	B2	B	67	S	A	P	S	F		A
			DB		T	A			11			V		Q	T	N		B
			EB			B						C		R	N			
			FB															
			GB															
			HB															
I C S	0	9	CB	D	D	Z	S	71	B2	A	71	S	A	P	S	F		A
			DB		T	A			11	B		V		Q	T	N		B
			EB			B						C		R	N			
			FB															
			GB															
			HB															

Varianti
Variants

Versioni
Versions

I	A	S	0	9	CB	D	D	Z	S	75	B2	A	80	S	M	P	S	F		A
					DB		T	A		80				V		Q	T	N		B
					EB			B		86				C		R	N			
					FB			V		90										
					GB															
					HB															
I	A	S	0	9	CB	D	D	Z	S	75	B2	A	75	S	M	P	S	F		A
					DB		T	A		80	11			V		Q	T	N		B
					EB			B		86				C		R	N			
					FB			V		90										
					GB															
					HB															
I	A	S	0	9	CB	D	D	Z	S	71	B2	A	71	S	M	P	S	F		A
					DB		T	A			11			V		Q	T	N		B
					EB			B						C		R	N			
					FB			V												
					GB															
					HB															
I	A	S	0	9	CB	D	D	Z	S	67	B2	A	67	S	M	P	S	F		A
					DB		T	A			11			V		Q	T	N		B
					EB			B						C		R	N			
					FB			V												
					GB															
					HB															
I	A	S	0	9	CB	D	D	Z	S	75	B2	A	80	S	A	P	S	F		A
					DB		T	A		80				V		Q	T	N		B
					EB			B		86				C		R	N			
					FB					90										
					GB															
					HB															
I	A	S	0	9	CB	D	D	Z	S	75	B2	A	75	S	A	P	S	F		A
					DB		T	A		80	11			V		Q	T	N		B
					EB			B		86				C		R	N			
					FB					90										
					GB															
					HB															
I	A	S	0	9	CB	D	D	Z	S	71	B2	A	71	S	A	P	S	F		A
					DB		T	A			11			V		Q	T	N		B
					EB			B						C		R	N			
					FB															
					GB															
					HB															
I	A	S	0	9	CB	D	D	Z	S	67	B2	A	67	S	A	P	S	F		A
					DB		T	A			11			V		Q	T	N		B
					EB			B						C		R	N			
					FB															
					GB															
					HB															
I	C	S	1	1	CB	D	D	C	S	75	B2	B	80	S	M	P	S	F		A
					DB		T	E		80				V		Q	T	N		B
					EB		S	F		86				C		R	N			
					FB					90										
					GB															
					HB															

Varianti
Variants

Versioni
Versions

I	C	S	1	1	CB	D	D	C	S	75	B2	B	75	S	M	P	S	F	A
					DB		T	E		80	11			V		Q	T	N	B
					EB		S	F		86				C		R	N		
					FB					90									
					GB														
					HB														
I	C	S	1	1	CB	D	D	C	S	71	B2	B	71	S	M	P	S	F	A
					DB		T	E			11			V		Q	T	N	B
					EB		S	F						C		R	N		
					FB														
					GB														
					HB														
I	C	S	1	1	CB	D	D	C	S	67	B2	B	67	S	M	P	S	F	A
					DB		T	E			11			V		Q	T	N	B
					EB		S	F						C		R	N		
					FB														
					GB														
					HB														
I	C	S	1	1	CB	D	S	C	S	80	B2	B	67	S	M	P	S	F	A
					DB			E						V		Q	T	N	B
					EB			F						C		R	N		
					FB														
					GB														
					HB														
I	C	S	1	1	CB	L	D	F	S	75	B2	B	80	S	M	P	S	F	A
					DB		T			80				V		Q	T	N	B
					EB		S			86				C		R	N		
					FB					90									
					GB														
					HB														
I	C	S	1	1	CB	L	D	F	S	75	B2	B	75	S	M	P	S	F	A
					DB		T			80	11			V		Q	T	N	B
					EB		S			86				C		R	N		
					FB					90									
					GB														
					HB														
I	C	S	1	1	CB	L	D	F	S	71	B2	B	71	S	M	P	S	F	A
					DB		T				11			V		Q	T	N	B
					EB		S							C		R	N		
					FB														
					GB														
					HB														
I	C	S	1	1	CB	L	D	F	S	67	B2	B	67	S	M	P	S	F	A
					DB		T				11			V		Q	T	N	B
					EB		S							C		R	N		
					FB														
					GB														
					HB														
I	C	S	1	1	CB	L	S	F	S	80	B2	B	67	S	M	P	S	F	A
					DB									V		Q	T	N	B
					EB									C		R	N		
					FB														
					GB														
					HB														

Varianti
Variants

Versioni
Versions

I	A	S	1	1	CB	D	D	C	S	75	B2	A	80	S	M	P	S	F	A
					DB		T	E		80				V		Q	T	N	B
					EB		S	F		86				C		R	N		
					FB					90									
					GB														
					HB														
I	A	S	1	1	CB	D	D	C	S	75	B2	A	75	S	M	P	S	F	A
					DB		T	E		80	11			V		Q	T	N	B
					EB		S	F		86				C		R	N		
					FB					90									
					GB														
					HB														
I	A	S	1	1	CB	D	D	C	S	71	B2	A	71	S	M	P	S	F	A
					DB		T	E			11			V		Q	T	N	B
					EB		S	F						C		R	N		
					FB														
					GB														
					HB														
I	A	S	1	1	CB	D	D	C	S	67	B2	A	67	S	M	P	S	F	A
					DB		T	E			11			V		Q	T	N	B
					EB		S	F						C		R	N		
					FB														
					GB														
					HB														
I	A	S	1	1	CB	D	S	C	S	80	B2	A	67	S	M	P	S	F	A
					DB			E						V		Q	T	N	B
					EB			F						C		R	N		
					FB														
					GB														
					HB														
I	A	S	1	1	CB	L	D	F	S	75	B2	A	80	S	M	P	S	F	A
					DB		T			80				V		Q	T	N	B
					EB		S			86				C		R	N		
					FB					90									
					GB														
					HB														
I	A	S	1	1	CB	L	D	F	S	75	B2	A	75	S	M	P	S	F	A
					DB		T			80	11			V		Q	T	N	B
					EB		S			86				C		R	N		
					FB					90									
					GB														
					HB														
I	A	S	1	1	CB	L	D	F	S	71	B2	A	71	S	M	P	S	F	A
					DB		T				11			V		Q	T	N	B
					EB		S							C		R	N		
					FB														
					GB														
					HB														
I	A	S	1	1	CB	L	D	F	S	67	B2	A	67	S	M	P	S	F	A
					DB		T				11			V		Q	T	N	B
					EB		S							C		R	N		
					FB														
					GB														
					HB														

Varianti
Variants

Versioni
Versions

I	A	S	1	1	CB	L	S	F	S	80	B2	A	67	S	M	P	S	F		A
					DB									V		Q	T	N		B
					EB									C		R	N			
					FB															
					GB															
					HB															
I	C	S	1	2	CB	D	S	R	S	75	B2	B	80	S	M	P	S	F		A
					DB			S		80				V		Q	T	N		B
					EB					86				C		R	N			
					FB					90										
					GB															
					HB															
I	C	S	1	2	CB	D	S	R	S	75	B2	B	75	S	M	P	S	F		A
					DB			S		80	11			V		Q	T	N		B
					EB					86				C		R	N			
					FB					90										
					GB															
					HB															
I	C	S	1	2	CB	D	S	R	S	71	B2	B	71	S	M	P	S	F		A
					DB			S			11			V		Q	T	N		B
					EB									C		R	N			
					FB															
					GB															
					HB															
I	C	S	1	2	CB	D	S	R	S	67	B2	B	67	S	M	P	S	F		A
					DB			S			11			V		Q	T	N		B
					EB									C		R	N			
					FB															
					GB															
					HB															
I	C	S	1	2	CB	L	S	S	S	75	B2	B	80	S	M	P	S	F		A
					DB					80				V		Q	T	N		B
					EB					86				C		R	N			
					FB					90										
					GB															
					HB															
I	C	S	1	2	CB	L	S	S	S	75	B2	B	75	S	M	P	S	F		A
					DB					80	11			V		Q	T	N		B
					EB					86				C		R	N			
					FB					90										
					GB															
					HB															
I	C	S	1	2	CB	L	S	S	S	71	B2	B	71	S	M	P	S	F		A
					DB						11			V		Q	T	N		B
					EB									C		R	N			
					FB															
					GB															
					HB															
I	C	S	1	2	CB	L	S	S	S	67	B2	B	67	S	M	P	S	F		A
					DB						11			V		Q	T	N		B
					EB									C		R	N			
					FB															
					GB															
					HB															

Varianti
Variants

Versioni
Versions

I	C	S	1	2	CB	D	S	R	S	80	B2	B	67	S	M	P	S	F	A
					DB			S						V		Q	T	N	B
					EB									C		R	N		
					FB														
					GB														
					HB														
I	C	S	1	2	CB	L	S	S	S	80	B2	B	67	S	M	P	S	F	A
					DB									V		Q	T	N	B
					EB									C		R	N		
					FB														
					GB														
					HB														
I	A	S	1	2	CB	D	S	R	S	75	B2	A	80	S	M	P	S	F	A
					DB					80				V		Q	T	N	B
					EB					86				C		R	N		
					FB					90									
					GB														
					HB														
I	A	S	1	2	CB	D	S	R	S	75	B2	A	75	S	M	P	S	F	A
					DB					80	11			V		Q	T	N	B
					EB					86				C		R	N		
					FB					90									
					GB														
					HB														
I	A	S	1	2	CB	D	S	R	S	71	B2	A	71	S	M	P	S	F	A
					DB						11			V		Q	T	N	B
					EB									C		R	N		
					FB														
					GB														
					HB														
I	A	S	1	2	CB	D	S	R	S	67	B2	A	67	S	M	P	S	F	A
					DB						11			V		Q	T	N	B
					EB									C		R	N		
					FB														
					GB														
					HB														
I	A	S	1	2	CB	D	S	S	S	75	B2	A	80	S	M	P	S	F	A
					DB					80				V		Q	T	N	B
					EB					86				C		R	N		
					FB					90									
					GB														
					HB														
I	A	S	1	2	CB	D	S	S	S	75	B2	A	75	S	M	P	S	F	A
					DB					80	11			V		Q	T	N	B
					EB					86				C		R	N		
					FB					90									
					GB														
					HB														
I	A	S	1	2	CB	D	S	S	S	71	B2	A	71	S	M	P	S	F	A
					DB	L					11			V		Q	T	N	B
					EB									C		R	N		
					FB														
					GB														
					HB														

Varianti
Variants

Versioni
Versions

I	A	S	1	2	CB	D	S	S	S	67	B2	A	67	S	M	P	S	F		A
					DB	L					11			V		Q	T	N		B
					EB									C		R	N			
					FB															
					GB															
					HB															
I	A	S	1	2	CB	L	S	S	S	75	B2	A	80	S	M	P	S	F		A
					DB					80				V		Q	T	N		B
					EB					86				C		R	N			
					FB					90										
					GB															
					HB															
I	A	S	1	2	CB	L	S	S	S	75	B2	A	75	S	M	P	S	F		A
					DB					80	11			V		Q	T	N		B
					EB					86				C		R	N			
					FB					90										
					GB															
					HB															
I	A	S	1	2	CB	D	S	R	S	80	B2	A	67	S	M	P	S	F		A
					DB			S						V		Q	T	N		B
					EB									C		R	N			
					FB															
					GB															
					HB															
I	A	S	1	2	CB	L	S	S	S	80	B2	A	67	S	M	P	S	F		A
					DB									V		Q	T	N		B
					EB									C		R	N			
					FB															
					GB															
					HB															
B	C	S	0	9	CB	D	D	Z	S	75	B2	B	75	S	M	P	S	F		A
					DB		T	A		80			80	V		Q	T	N		B
					EB			B		90				C		R	N			
					FB			V												
					GB															
					HB															
B	C	S	0	9	CB	D	D	B	H	75	B2	B	75	S	M	P	S	F		A
					DB		T	V		80			80	V		Q	T	N		B
					EB					90				C		R	N			
					FB															
					GB															
					HB															
B	C	S	0	9	CB	D	D	Z	S	75	B2	B	75	S	A	P	S	F		A
					DB		T	A		80			80	V		Q	T	N		B
					EB			B		90				C		R	N			
					FB															
					GB															
					HB															
B	C	S	0	9	CB	D	D	B	H	75	B2	B	75	S	A	P	S	F		A
					DB		T			80			80	V		Q	T	N		B
					EB					90				C		R	N			
					FB															
					GB															
					HB															

Varianti
Variants

Versioni
Versions

B	C	S	1	1	CB	D	D	C	S	75	B2	B	75	S	M	P	S	F	A
					DB		T	E	H	80			80	V		Q	T	N	B
					EB		S	F		90				C		R	N		
					FB														
					GB														
					HB														
B	C	S	1	1	CB	L	D	F	S	75	B2	B	75	S	M	P	S	F	A
					DB		T		H	80			80	V		Q	T	N	B
					EB		S			90				C		R	N		
					FB														
					GB														
					HB														
B	C	S	1	2	CB	D	S	R	S	75	B2	B	75	S	M	P	S	F	A
					DB			S	H	80			80	V		Q	T	N	B
					EB					90				C		R	N		
					FB														
					GB														
					HB														
B	C	S	1	2	CB	L	S	S	S	75	B2	B	75	S	M	P	S	F	A
					DB				H	80			80	V		Q	T	N	B
					EB					90				C		R	N		
					FB														
					GB														
					HB														
I	C	C	G	3	CB	D	S	C	S	75	B2	B	75	S	M	P	S	F	A
					DB			E			11			V		Q	T	N	B
					EB									C		R	N		
					FB														
					GB														
					HB														
I	C	C	G	3	CB	D	S	C	S	75	B2	B	80	S	M	P	S	F	A
					DB			E		80				V		Q	T	N	B
					EB					90				C		R	N		
					FB														
					GB														
					HB														
2	A	S	1	1	CB	D	D	C	S	67	11	B	67	S	M	P	S	F	A
					DB		T	E			B2			V		Q	T	N	B
					EB		S	F						C		R	N		
					FB														
					GB														
					HB														
2	A	S	1	1	CB	D	D	C	S	80	B2	B	67	S	M	P	S	F	A
					DB		T	E						V		Q	T	N	B
					EB		S	F						C		R	N		
					FB														
					GB														
					HB														
2	A	S	1	1	CB	D	D	C	S	75	11	B	75	S	M	P	S	F	A
					DB		T	E		80				V		Q	T	N	B
					EB		S	F		86				C		R	N		
					FB					90									
					GB														
					HB														

Varianti
Variants

Versioni
Versions

2	A	S	1	1	CB	D	D	C	S	75	B2	B	75	S	M	P	S	F	A
					DB		T	E		80			80	V		Q	T	N	B
					EB		S	F		86				C		R	N		
					FB					90									
					GB														
					HB														
2	A	S	1	1	CB	L	D	F	S	67	11	B	67	S	M	P	S	F	A
					DB		T				B2			V		Q	T	N	B
					EB		S							C		R	N		
					FB														
					GB														
					HB														
2	A	S	1	1	CB	L	D	F	S	80	B2	B	67	S	M	P	S	F	A
					DB		T							V		Q	T	N	B
					EB		S							C		R	N		
					FB														
					GB														
					HB														
2	A	S	1	1	CB	L	D	F	S	75	11	B	75	S	M	P	S	F	A
					DB		T			80				V		Q	T	N	B
					EB		S			86				C		R	N		
					FB					90									
					GB														
					HB														
2	A	S	1	1	CB	L	D	F	S	75	B2	B	75	S	M	P	S	F	A
					DB		T			80			80	V		Q	T	N	B
					EB		S			86				C		R	N		
					FB					90									
					GB														
					HB														
2	C	S	1	1	CB	D	D	C	S	67	11	B	67	S	M	P	S	F	A
					DB		T	E			B2			V		Q	T	N	B
					EB		S	F						C		R	N		
					FB														
					GB														
					HB														
2	C	S	1	1	CB	D	D	C	S	80	B2	B	67	S	M	P	S	F	A
					DB		T	E						V		Q	T	N	B
					EB		S	F						C		R	N		
					FB														
					GB														
					HB														
2	C	S	1	1	CB	D	D	C	S	75	11	B	75	S	M	P	S	F	A
					DB		T	E		80				V		Q	T	N	B
					EB		S	F		86				C		R	N		
					FB					90									
					GB														
					HB														
2	C	S	1	1	CB	D	D	C	S	75	B2	B	75	S	M	P	S	F	A
					DB		T	E		80			80	V		Q	T	N	B
					EB		S	F		86				C		R	N		
					FB					90									
					GB														
					HB														

Varianti
Variants

Versioni
Versions

2	C	S	1	1	CB	L	D	F	S	67	11	B	67	S	M	P	S	F	A
					DB		T				B2			V		Q	T	N	B
					EB		S							C		R	N		
					FB														
					GB														
					HB														
2	C	S	1	1	CB	L	D	F	S	80	B2	B	67	S	M	P	S	F	A
					DB		T							V		Q	T	N	B
					EB		S							C		R	N		
					FB														
					GB														
					HB														
2	C	S	1	1	CB	L	D	F	S	75	11	B	75	S	M	P	S	F	A
					DB		T			80				V		Q	T	N	B
					EB		S			86				C		R	N		
					FB					90									
					GB														
					HB														
2	C	S	1	1	CB	L	D	F	S	75	B2	B	75	S	M	P	S	F	A
					DB		T			80			80	V		Q	T	N	B
					EB		S			86				C		R	N		
					FB					90									
					GB														
					HB														
2	A	S	1	2	CB	D	S	R	S	67	11	B	67	S	M	P	S	F	A
					DB			S			B2			V		Q	T	N	B
					EB									C		R	N		
					FB														
					GB														
					HB														
2	A	S	1	2	CB	D	S	R	S	80	B2	B	67	S	M	P	S	F	A
					DB			S						V		Q	T	N	B
					EB									C		R	N		
					FB														
					GB														
					HB														
2	A	S	1	2	CB	D	S	R	S	75	11	B	75	S	M	P	S	F	A
					DB			S		80				V		Q	T	N	B
					EB					86				C		R	N		
					FB					90									
					GB														
					HB														
2	A	S	1	2	CB	D	S	R	S	75	B2	B	75	S	M	P	S	F	A
					DB			S		80			80	V		Q	T	N	B
					EB					86				C		R	N		
					FB					90									
					GB														
					HB														
2	A	S	1	2	CB	L	S	S	S	67	11	B	67	S	M	P	S	F	A
					DB						B2			V		Q	T	N	B
					EB									C		R	N		
					FB														
					GB														
					HB														

Varianti
Variants

Versioni
Versions

2	A	S	1	2	CB	L	S	S	S	80	B2	B	67	S	M	P	S	F	A
					DB									V		Q	T	N	B
					EB									C		R	N		
					FB														
					GB														
					HB														
2	A	S	1	2	CB	L	S	S	S	75	11	B	75	S	M	P	S	F	A
					DB					80				V		Q	T	N	B
					EB					86				C		R	N		
					FB					90									
					GB														
					HB														
2	A	S	1	2	CB	L	S	S	S	75	B2	B	75	S	M	P	S	F	A
					DB					80			80	V		Q	T	N	B
					EB					86				C		R	N		
					FB					90									
					GB														
					HB														
2	C	S	1	2	CB	D	S	R	S	67	11	B	67	S	M	P	S	F	A
					DB			S			B2			V		Q	T	N	B
					EB									C		R	N		
					FB														
					GB														
					HB														
2	C	S	1	2	CB	D	S	R	S	80	B2	B	67	S	M	P	S	F	A
					DB			S						V		Q	T	N	B
					EB									C		R	N		
					FB														
					GB														
					HB														
2	C	S	1	2	CB	D	S	R	S	75	11	B	75	S	M	P	S	F	A
					DB			S		80				V		Q	T	N	B
					EB					86				C		R	N		
					FB					90									
					GB														
					HB														
2	C	S	1	2	CB	D	S	R	S	75	B2	B	75	S	M	P	S	F	A
					DB			S		80			80	V		Q	T	N	B
					EB					86				C		R	N		
					FB					90									
					GB														
					HB														
2	C	S	1	2	CB	L	S	S	S	67	11	B	67	S	M	P	S	F	A
					DB						B2			V		Q	T	N	B
					EB									C		R	N		
					FB														
					GB														
					HB														
2	C	S	1	2	CB	L	S	S	S	80	B2	B	67	S	M	P	S	F	A
					DB									V		Q	T	N	B
					EB									C		R	N		
					FB														
					GB														
					HB														

Varianti
Variants

Versioni
Versions

2	C	S	1	2	CB	L	S	S	S	75	11	B	75	S	M	P	S	F	A
					DB					80				V		Q	T	N	B
					EB					86				C		R	N		
					FB					90									
					GB														
					HB														
2	C	S	1	2	CB	L	S	S	S	75	B2	B	75	S	M	P	S	F	A
					DB					80			80	V		Q	T	N	B
					EB					86				C		R	N		
					FB					90									
					GB														
					HB														
4	C	S	1	1	CB	D	D	C	S	75	B2	B	75	S	M	P	S	F	A
					DB		T	E	H	80			80	V		Q	T	N	B
					EB		S	F		86				C		R	N		
					FB					90									
					GB														
					HB														
4	C	S	1	1	CB	L	D	F	S	75	B2	B	75	S	M	P	S	F	A
					DB		T		H	80			80	V		Q	T	N	B
					EB		S			86				C		R	N		
					FB					90									
					GB														
					HB														
4	C	S	1	2	CB	D	S	R	S	75	B2	B	75	S	M	P	S	F	A
					DB			S	H	80			80	V		Q	T	N	B
					EB					86				C		R	N		
					FB					90									
					GB														
					HB														
4	C	S	1	2	CB	L	S	S	S	75	B2	B	75	S	M	P	S	F	A
					DB				H	80			80	V		Q	T	N	B
					EB					86				C		R	N		
					FB					90									
					GB														
					HB														
4	C	S	0	9	CB	D	D	A	S	75	B2	B	75	S	A	P	S	N	A
					DB		T			80			80	V		Q	T		B
					EB					86				C		R	N		
					FB					90									
					GB														
					HB														
4	C	S	0	9	CB	D	D	B	S	75	B2	B	75	S	A	P	S	N	A
					DB		T		H	80			80	V		Q	T		B
					EB					86				C		R	N		
					FB					90									
					GB														
					HB														
4	C	S	0	9	CB	D	D	A	S	75	B2	B	75	S	M	P	S	F	A
					DB		T			80			80	V		Q	T	N	B
					EB					86				C		R	N		
					FB					90									
					GB														
					HB														

Varianti ***Variants***	Versioni ***Versions***																	
4	C	S	0	9	CB	D	D	B	S	75	B2	B	75	S	M	P	S	F	A
					DB		T	V	H	80			80	V		Q	T	N	B
					EB					86				C		R	N		
					FB					90									
					GB														
					HB														
2	C	S	0	9	CB	D	D	A	S	67	11	B	67	S	M	P	S	F	A
					DB		T	B			B2			V		Q	T	N	B
					EB									C		R	N		
					FB														
					GB														
					HB														
2	C	S	0	9	CB	D	D	A	S	80	B2	B	67	S	M	P	S	F	A
					DB		T	B						V		Q	T	N	B
					EB									C		R	N		
					FB														
					GB														
					HB														
2	C	S	0	9	CB	D	D	A	S	75	11	B	75	S	M	P	S	F	A
					DB		T	B		80				V		Q	T	N	B
					EB					86				C		R	N		
					FB					90									
					GB														
					HB														
2	C	S	0	9	CB	D	D	A	S	75	B2	B	75	S	M	P	S	F	A
					DB		T	B		80			80	V		Q	T	N	B
					EB					86				C		R	N		
					FB					90									
					GB														
					HB														
2	C	S	0	9	CB	D	D	A	S	67	11	B	67	S	M	P	S	F	A
					DB		T	B			B2			V		Q	T	N	B
					EB			V						C		R	N		
					FB														
					GB														
					HB														
2	C	S	0	9	CB	D	D	A	S	80	B2	B	67	S	M	P	S	F	A
					DB		T	B						V		Q	T	N	B
					EB			V						C		R	N		
					FB														
					GB														
					HB														
2	C	S	0	9	CB	D	D	A	S	75	11	B	75	S	M	P	S	F	A
					DB		T	B		80				V		Q	T	N	B
					EB			V		86				C		R	N		
					FB					90									
					GB														
					HB														
2	C	S	0	9	CB	D	D	A	S	75	B2	B	75	S	M	P	S	F	A
					DB		T	B		80			80	V		Q	T	N	B
					EB			V		86				C		R	N		
					FB					90									
					GB														
					HB														

Varianti ***Variants***	Versioni ***Versions***	
2 A S	0 9 CB D D A S 67 11 A 67 S A P S N DB T B B2 V Q T EB C R N FB GB HB	A B
2 A S	0 9 CB D D A S 80 B2 A 67 S A P S N DB T B V Q T EB C R N FB GB HB	A B
2 A S	0 9 CB D D A S 75 11 A 75 S A P S N DB T B 80 V Q T EB 86 C R N FB 90 GB HB	A B
2 A S	0 9 CB D D A S 75 B2 A 75 S A P S N DB T B 80 80 V Q T EB 86 C R N FB 90 GB HB	A B
2 A S	0 9 CB D D A S 67 11 A 67 S M P S F DB T B B2 V Q T N EB V C R N FB GB HB	A B
2 A S	0 9 CB D D A S 80 B2 A 67 S M P S F DB T B V Q T N EB V C R N FB GB HB	A B
2 A S	0 9 CB D D A S 75 11 A 75 S M P S F DB T B 80 V Q T N EB V 86 C R N FB 90 GB HB	A B
2 A S	0 9 CB D D A S 75 B2 A 75 S M P S F DB T B 80 80 V Q T N EB V 86 C R N FB 90 GB HB	A B
2 C C	G 9 CB D D T S 75 11 B 75 S A P S N DB V Q T EB C R N FB LB GB HB	A B

Varianti
Variants

Versioni
Versions

2	C	C	G	9	CB	D	D	T	S	75	B2	B	75	S	A	P	S	N	A
					DB					80			80	V		Q	T		B
					EB									C		R	N		
					FB														
					LB														
					GB														
					HB														
2	C	C	G	9	CB	D	D	T	S	86	B2	B	80	S	A	P	S	N	A
					DB					90				V		Q	T		B
					EB									C		R	N		
					FB														
					LB														
					GB														
					HB														
2	C	C	G	9	CB	D	D	U	S	75	11	B	75	S	A	P	S	N	A
					DB		T							V		Q	T		B
					EB									C		R	N		
					FB														
					LB														
					GB														
					HB														
2	C	C	G	9	CB	D	D	U	S	75	B2	B	75	S	A	P	S	N	A
					DB		T			80			80	V		Q	T		B
					EB									C		R	N		
					FB														
					LB														
					GB														
					HB														
2	C	C	G	9	CB	D	D	U	S	86	B2	B	80	S	A	P	S	N	A
					DB		T			90				V		Q	T		B
					EB									C		R	N		
					FB														
					LB														
					GB														
					HB														
2	C	C	G	9	CB	D	D	U	S	75	11	B	75	S	M	P	S	F	A
					DB		T	V						V		Q	T	N	B
					EB									C		R	N		
					FB														
					LB														
					GB														
					HB														
2	C	C	G	9	CB	D	D	U	S	75	B2	B	75	S	M	P	S	F	A
					DB		T	V		80			80	V		Q	T	N	B
					EB									C		R	N		
					FB														
					LB														
					GB														
					HB														
2	C	C	G	9	CB	D	D	U	S	86	B2	B	80	S	M	P	S	F	A
					DB		T	V		90				V		Q	T	N	B
					EB									C		R	N		
					FB														
					LB														
					GB														
					HB														

Varianti
Variants

Versioni
Versions

2	C	C	G	3	CB	D	S	E	S	75	11	B	75	S	M	P	S	F		A
					DB									V		Q	T	N		B
					EB									C		R	N			
					FB															
					GB															
					HB															
2	C	C	G	3	CB	D	S	E	S	75	B2	B	75	S	M	P	S	F		A
					DB					80			80	V		Q	T	N		B
					EB									C		R	N			
					FB															
					GB															
					HB															
2	C	C	G	3	CB	D	S	E	S	86	B2	B	80	S	M	P	S	F		A
					DB					90				V		Q	T	N		B
					EB									C		R	N			
					FB															
					GB															
					HB															
2	**C**	**S**	**0**	**9**	**CB**	**E**	**D**	**W**	**S**	**67**	**11**	**B**	**67**	**S**	**A**	**P**	**S**	**N**		**A**
					DB		**T**	**B**			**B2**			**V**		**Q**	**T**			**B**
					EB									**C**		**R**	**N**			
					FB															
					LB															
					GB															
					HB															
2	**C**	**S**	**0**	**9**	**CB**	**E**	**D**	**W**	**S**	**80**	**B2**	**B**	**67**	**S**	**A**	**P**	**S**	**N**		**A**
					DB		**T**	**B**						**V**		**Q**	**T**			**B**
					EB									**C**		**R**	**N**			
					FB															
					LB															
					GB															
					HB															
2	**C**	**S**	**0**	**9**	**CB**	**E**	**D**	**W**	**S**	**75**	**11**	**B**	**75**	**S**	**A**	**P**	**S**	**N**		**A**
					DB		**T**	**B**		**80**				**V**		**Q**	**T**			**B**
					EB					**86**				**C**		**R**	**N**			
					FB					**90**										
					LB															
					GB															
					HB															
2	**C**	**S**	**0**	**9**	**CB**	**E**	**D**	**W**	**S**	**75**	**B2**	**B**	**75**	**S**	**A**	**P**	**S**	**N**		**A**
					DB		**T**	**B**		**80**			**80**	**V**		**Q**	**T**			**B**
					EB					**86**				**C**		**R**	**N**			
					FB					**90**										
					LB															
					GB															
					HB															
2	**C**	**S**	**0**	**9**	**CB**	**E**	**D**	**W**	**S**	**67**	**11**	**B**	**67**	**S**	**M**	**P**	**S**	**F**		**A**
					DB		**T**	**B**			**B2**			**V**		**Q**	**T**	**N**		**B**
					EB			**V**						**C**		**R**	**N**			
					FB															
					LB															
					GB															
					HB															

Varianti
Variants

Versioni
Versions

2	C	S	0	9	CB	E	D	W	S	80	B2	B	67	S	M	P	S	F	A
					DB		T	B						V		Q	T	N	B
					EB			V						C		R	N		
					FB														
					LB														
					GB														
					HB														
2	C	S	0	9	CB	E	D	W	S	75	11	B	75	S	M	P	S	F	A
					DB		T	B		80				V		Q	T	N	B
					EB			V		86				C		R	N		
					FB					90									
					LB														
					GB														
					HB														
2	C	S	0	9	CB	E	D	W	S	75	B2	B	75	S	M	P	S	F	A
					DB		T	B		80			80	V		Q	T	N	B
					EB			V		86				C		R	N		
					FB					90									
					LB														
					GB														
					HB														
2	A	S	0	9	CB	E	D	W	S	67	11	A	67	S	A	P	S	N	A
					DB		T	B			B2			V		Q	T		B
					EB									C		R	N		
					FB														
					LB														
					GB														
					HB														
2	A	S	0	9	CB	E	D	W	S	80	B2	A	67	S	A	P	S	N	A
					DB		T	B						V		Q	T		B
					EB									C		R	N		
					FB														
					LB														
					GB														
					HB														
2	A	S	0	9	CB	E	D	W	S	75	11	A	75	S	A	P	S	N	A
					DB		T	B		80				V		Q	T		B
					EB					86				C		R	N		
					FB					90									
					LB														
					GB														
					HB														
2	A	S	0	9	CB	E	D	W	S	75	B2	A	75	S	A	P	S	N	A
					DB		T	B		80			80	V		Q	T		B
					EB					86				C		R	N		
					FB					90									
					LB														
					GB														
					HB														
2	A	S	0	9	CB	E	D	W	S	67	11	A	67	S	M	P	S	F	A
					DB		T	B			B2			V		Q	T	N	B
					EB			V						C		R	N		
					FB														
					LB														
					GB														
					HB														

Varianti
Variants

Versioni
Versions

2	A	S	0	9	CB	E	D	W	S	80	B2	A	67	S	M	P	S	F	A
					DB		T	B						V		Q	T	N	B
					EB			V						C		R	N		
					FB														
					LB														
					GB														
					HB														
2	A	S	0	9	CB	E	D	W	S	75	11	A	75	S	M	P	S	F	A
					DB		T	B		80				V		Q	T	N	B
					EB			V		86				C		R	N		
					FB					90									
					LB														
					GB														
					HB														
2	A	S	0	9	CB	E	D	W	S	75	B2	A	75	S	M	P	S	F	A
					DB		T	B		80			80	V		Q	T	N	B
					EB			V		86				C		R	N		
					FB					90									
					LB														
					GB														
					HB														
2	C	S	1	1	CB	E	D	C	S	67	11	B	67	S	M	P	S	F	A
					DB		T	E			B2			V		Q	T	N	B
					EB			F						C		R	N		
					FB														
					LB														
					GB														
					HB														
2	C	S	1	1	CB	E	D	C	S	80	B2	B	67	S	M	P	S	F	A
					DB		T	E						V		Q	T	N	B
					EB			F						C		R	N		
					FB														
					LB														
					GB														
					HB														
2	C	S	1	1	CB	E	D	C	S	75	11	B	75	S	M	P	S	F	A
					DB		T	E		80				V		Q	T	N	B
					EB			F		86				C		R	N		
					FB					90									
					LB														
					GB														
					HB														
2	C	S	1	1	CB	E	D	C	S	75	B2	B	75	S	M	P	S	F	A
					DB		T	E		80			80	V		Q	T	N	B
					EB			F		86				C		R	N		
					FB					90									
					LB														
					GB														
					HB														
2	A	S	1	1	CB	E	D	C	S	67	11	A	67	S	M	P	S	F	A
					DB		T	E			B2			V		Q	T	N	B
					EB			F						C		R	N		
					FB														
					LB														
					GB														
					HB														

Varianti
Variants

Versioni
Versions

2	A	S	1	1	CB	E	D	C	S	80	B2	A	67	S	M	P	S	F	A
					DB		T	E						V		Q	T	N	B
					EB			F						C		R	N		
					FB														
					LB														
					GB														
					HB														
2	A	S	1	1	CB	E	D	C	S	75	11	A	75	S	M	P	S	F	A
					DB		T	E		80				V		Q	T	N	B
					EB			F		86				C		R	N		
					FB					90									
					LB														
					GB														
					HB														
2	A	S	1	1	CB	E	D	C	S	75	B2	A	75	S	M	P	S	F	A
					DB		T	E		80			80	V		Q	T	N	B
					EB			F		86				C		R	N		
					FB					90									
					LB														
					GB														
					HB														
2	C	S	1	1	CB	E	S	C	S	67	11	B	67	S	M	P	S	F	A
					DB			E			B2			V		Q	T	N	B
					EB									C		R	N		
					FB														
					LB														
					GB														
					HB														
2	C	S	1	1	CB	E	S	C	S	80	B2	B	67	S	M	P	S	F	A
					DB			E						V		Q	T	N	B
					EB									C		R	N		
					FB														
					LB														
					GB														
					HB														
2	C	S	1	1	CB	E	S	C	S	75	11	B	75	S	M	P	S	F	A
					DB			E		80				V		Q	T	N	B
					EB					86				C		R	N		
					FB					90									
					LB														
					GB														
					HB														
2	C	S	1	1	CB	E	S	C	S	75	B2	B	75	S	M	P	S	F	A
					DB			E		80			80	V		Q	T	N	B
					EB					86				C		R	N		
					FB					90									
					LB														
					GB														
					HB														
2	A	S	1	1	CB	E	S	C	S	67	11	A	67	S	M	P	S	F	A
					DB			E			B2			V		Q	T	N	B
					EB									C		R	N		
					FB														
					LB														
					GB														
					HB														

Varianti
Variants

Versioni
Versions

2	A	S	1	1	CB	E	S	C	S	80	B2	A	67	S	M	P	S	F	A
					DB			E						V		Q	T	N	B
					EB									C		R	N		
					FB														
					LB														
					GB														
					HB														
2	A	S	1	1	CB	E	S	C	S	75	11	A	75	S	M	P	S	F	A
					DB			E		80				V		Q	T	N	B
					EB					86				C		R	N		
					FB					90									
					LB														
					GB														
					HB														
2	A	S	1	1	CB	E	S	C	S	75	B2	A	75	S	M	P	S	F	A
					DB			E		80			80	V		Q	T	N	B
					EB					86				C		R	N		
					FB					90									
					LB														
					GB														
					HB														
2	A	S	1	2	CB	E	S	X	S	67	11	A	67	S	M	P	S	F	A
					DB			Y			B2			V		Q	T	N	B
					EB			S						C		R	N		
					FB														
					LB														
					GB														
					HB														
2	A	S	1	2	CB	E	S	X	S	80	B2	A	67	S	M	P	S	F	A
					DB			Y						V		Q	T	N	B
					EB			S						C		R	N		
					FB														
					LB														
					GB														
					HB														
2	A	S	1	2	CB	E	S	X	S	75	11	A	75	S	M	P	S	F	A
					DB			Y		80				V		Q	T	N	B
					EB			S		86				C		R	N		
					FB					90									
					LB														
					GB														
					HB														
2	A	S	1	2	CB	E	S	X	S	75	B2	A	75	S	M	P	S	F	A
					DB			Y		80			80	V		Q	T	N	B
					EB			S		86				C		R	N		
					FB					90									
					LB														
					GB														
					HB														
2	C	S	1	2	CB	E	S	X	S	67	11	B	67	S	M	P	S	F	A
					DB			Y			B2			V		Q	T	N	B
					EB			S						C		R	N		
					FB														
					LB														
					GB														
					HB														

Varianti
Variants

Versioni
Versions

2	C	S	1	2	CB	E	S	X	S	80	B2	B	67	S	M	P	S	F	A
					DB			Y						V		Q	T	N	B
					EB			S						C		R	N		
					FB														
					LB														
					GB														
					HB														
2	C	S	1	2	CB	E	S	X	S	75	11	B	75	S	M	P	S	F	A
					DB			Y		80				V		Q	T	N	B
					EB			S		86				C		R	N		
					FB					90									
					LB														
					GB														
					HB														
2	C	S	1	2	CB	E	S	X	S	75	B2	B	75	S	M	P	S	F	A
					DB			Y		80			80	V		Q	T	N	B
					EB			S		86				C		R	N		
					FB					90									
					LB														
					GB														
					HB														
4	C	S	0	9	CB	E	D	W	S	75	B2	B	75	S	A	P	S	N	A
					DB		T			80			80	V		Q	T		B
					EB					86				C		R	N		
					FB					90									
					LB														
					GB														
					HB														
4	C	S	0	9	CB	E	D	B	S	75	B2	B	75	S	A	P	S	N	A
					DB		T		H	80			80	V		Q	T		B
					EB					86				C		R	N		
					FB					90									
					LB														
					GB														
					HB														
4	C	S	0	9	CB	E	D	W	S	75	B2	B	75	S	M	P	S	F	A
					DB		T			80			80	V		Q	T	N	B
					EB					86				C		R	N		
					FB					90									
					LB														
					GB														
					HB														
4	C	S	0	9	CB	E	D	B	S	75	B2	B	75	S	M	P	S	F	A
					DB		T	V	H	80			80	V		Q	T	N	B
					EB					86				C		R	N		
					FB					90									
					LB														
					GB														
					HB														
4	C	S	1	1	CB	E	D	C	S	75	B2	B	75	S	M	P	S	F	A
					DB		T	E	H	80			80	V		Q	T	N	B
					EB			F		86				C		R	N		
					FB					90									
					LB														
					GB														
					HB														

Varianti
Variants

Versioni
Versions

4	C	S

1	1	CB	E	S	C	S	75	B2	B	75	S	M	P	S	F	A
		DB			E	H	80			80	V		Q	T	N	B
		EB					86				C		R	N		
		FB					90									
		LB														
		GB														
		HB														

4	C	S

1	2	CB	E	S	X	S	75	B2	B	75	S	M	P	S	F	A
		DB			Y	H	80			80	V		Q	T	N	B
		EB			S		86				C		R	N		
		FB					90									
		LB														
		GB														
		HB														

Punto *Item*	Variante *Variant*	Versione *Version*	Descrizione *Description*			
1.1.	I??	??CB?S????????????? ?	55.01.03.0031	del / *of*	24.11.2015	rev.3
	I??	??CB?D????????????? ?	55.01.03.0032	del / *of*	12.01.2015	rev.2
	I??	??CB?T????????????? ?	55.01.03.0032	del / *of*	12.01.2015	rev.2
	I??	??DB?S????????????? ?	55.01.03.0033	del / *of*	22.04.2015	rev.3
	I??	??DB?D????????????? ?	55.01.03.0034	del / *of*	22.04.2015	rev.3
	I??	??DB?T????????????? ?	55.01.03.0034	del / *of*	22.04.2015	rev.3
	I??	??EB?S????????????? ?	55.01.03.0035	del / *of*	12.01.2015	rev.2
	I??	??EB?D????????????? ?	55.01.03.0036	del / *of*	12.01.2015	rev.2
	I??	??EB?T????????????? ?	55.01.03.0036	del / *of*	12.01.2015	rev.2
	I??	??FB?S????????????? ?	55.01.03.0037	del / *of*	12.01.2015	rev.2
	I??	??FB?D????????????? ?	55.01.03.0038	del / *of*	12.01.2015	rev.2
	I??	??FB?T????????????? ?	55.01.03.0038	del / *of*	12.01.2015	rev.2
	I??	??LB?D????????????? ?	55.01.03.0126	del / *of*	19.07.2018	rev.0
	I??	??LB?T????????????? ?	55.01.03.0126	del / *of*	19.07.2018	rev.0
	I??	??GB?S????????????? ?	55.01.03.0039	del / *of*	12.01.2015	rev.2
	I??	??GB?D????????????? ?	55.01.03.0040	del / *of*	12.01.2015	rev.2
	I??	??GB?T????????????? ?	55.01.03.0040	del / *of*	12.01.2015	rev.2
	I??	??HB?S????????????? ?	55.01.03.0041	del / *of*	12.01.2015	rev.2
	I??	??HB?D????????????? ?	55.01.03.0042	del / *of*	12.01.2015	rev.2
	I??	??HB?T????????????? ?	55.01.03.0042	del / *of*	12.01.2015	rev.2
	B??	??CB?S????????????? ?	55.01.03.0113	del / *of*	16.05.2018	rev.0
	B??	??CB?D????????????? ?	55.01.03.0114	del / *of*	16.05.2018	rev.0
	B??	??CB?T????????????? ?	55.01.03.0114	del / *of*	16.05.2018	rev.0
	B??	??DB?S????????????? ?	55.01.03.0115	del / *of*	16.05.2018	rev.0
	B??	??DB?D????????????? ?	55.01.03.0116	del / *of*	16.05.2018	rev.0
	B??	??DB?T????????????? ?	55.01.03.0116	del / *of*	16.05.2018	rev.0
	B??	??EB?S????????????? ?	55.01.03.0117	del / *of*	16.05.2018	rev.0
	B??	??EB?D????????????? ?	55.01.03.0118	del / *of*	16.05.2018	rev.0
	B??	??EB?T????????????? ?	55.01.03.0118	del / *of*	16.05.2018	rev.0
	B??	??FB?S????????????? ?	55.01.03.0119	del / *of*	16.05.2018	rev.0
	B??	??FB?D????????????? ?	55.01.03.0120	del / *of*	16.05.2018	rev.0
	B??	??FB?T????????????? ?	55.01.03.0120	del / *of*	16.05.2018	rev.0
	B??	??GB?S????????????? ?	55.01.03.0121	del / *of*	16.05.2018	rev.0
	B??	??GB?D????????????? ?	55.01.03.0122	del / *of*	16.05.2018	rev.0
	B??	??GB?T????????????? ?	55.01.03.0122	del / *of*	16.05.2018	rev.0
	B??	??HB?S????????????? ?	55.01.03.0123	del / *of*	16.05.2018	rev.0
	B??	??HB?D????????????? ?	55.01.03.0124	del / *of*	16.05.2018	rev.0
	B??	??HB?T????????????? ?	55.01.03.0124	del / *of*	16.05.2018	rev.0
	2?S	??CB?S????????????? ?	55.01.03.0163	del / *of*	31.01.2020	rev.0
	2?S	??CB?D????????????? ?	55.01.03.0157	del / *of*	31.01.2020	rev.0
	2?S	??CB?T????????????? ?	55.01.03.0157	del / *of*	31.01.2020	rev.0
	2?S	??DB?S????????????? ?	55.01.03.0164	del / *of*	31.01.2020	rev.0
	2?S	??DB?D????????????? ?	55.01.03.0158	del / of	31.01.2020	rev.0
	2?S	??DB?T????????????? ?	55.01.03.0158	del / of	31.01.2020	rev.0
	2?S	??EB?S????????????? ?	55.01.03.0165	del / *of*	31.01.2020	rev.0
	2?S	??EB?D????????????? ?	55.01.03.0159	del / *of*	31.01.2020	rev.0
	2?S	??EB?T????????????? ?	55.01.03.0159	del / *of*	31.01.2020	rev.0
	2?S	??FB?S????????????? ?	55.01.03.0166	del / *of*	31.01.2020	rev.0
	2?S	??FB?D????????????? ?	55.01.03.0160	del / *of*	31.01.2020	rev.0
	2?S	??FB?T????????????? ?	55.01.03.0160	del / *of*	31.01.2020	rev.0
	2?S	??GB?S????????????? ?	55.01.03.0167	del / *of*	31.01.2020	rev.0
	2?S	??GB?D????????????? ?	55.01.03.0161	del / *of*	31.01.2020	rev.0
	2?S	??GB?T????????????? ?	55.01.03.0161	del / *of*	31.01.2020	rev.0
	2?S	??HB?S????????????? ?	55.01.03.0168	del / *of*	31.01.2020	rev.0
	2?S	??HB?D????????????? ?	55.01.03.0162	del / *of*	31.01.2020	rev.0
	2?S	??HB?T????????????? ?	55.01.03.0162	del / *of*	31.01.2020	rev.0
	4CS	??CB?S????????????? ?	55.01.03.0175	del / *of*	31.01.2020	rev.0
	4CS	??CB?D????????????? ?	55.01.03.0169	del / *of*	31.01.2020	rev.0
	4CS	??CB?T????????????? ?	55.01.03.0169	del / *of*	31.01.2020	rev.0

Punto *Item*	Variante *Variant*	Versione *Version*	Descrizione *Description*				
	4CS	??DB?S????????????? ?	55.01.03.0176	del / ***of***	31.01.2020	rev.0	
	4CS	??DB?D????????????? ?	55.01.03.0170	del / ***of***	31.01.2020	rev.0	
	4CS	??DB?T????????????? ?	55.01.03.0170	del / ***of***	31.01.2020	rev.0	
	4CS	??EB?S????????????? ?	55.01.03.0177	del / ***of***	31.01.2020	rev.0	
	4CS	??EB?D????????????? ?	55.01.03.0171	del / ***of***	31.01.2020	rev.0	
	4CS	??EB?T????????????? ?	55.01.03.0171	del / ***of***	31.01.2020	rev.0	
	4CS	??FB?S????????????? ?	55.01.03.0178	del / ***of***	31.01.2020	rev.0	
	4CS	??FB?D????????????? ?	55.01.03.0172	del / ***of***	31.01.2020	rev.0	
	4CS	??FB?T????????????? ?	55.01.03.0172	del / ***of***	31.01.2020	rev.0	
	4CS	??GB?S????????????? ?	55.01.03.0179	del / ***of***	31.01.2020	rev.0	
	4CS	??GB?D????????????? ?	55.01.03.0173	del / ***of***	31.01.2020	rev.0	
	4CS	??GB?T????????????? ?	55.01.03.0173	del / ***of***	31.01.2020	rev.0	
	4CS	??HB?S????????????? ?	55.01.03.0180	del / ***of***	31.01.2020	rev.0	
	4CS	??HB?D????????????? ?	55.01.03.0174	del / ***of***	31.01.2020	rev.0	
	4CS	??HB?T????????????? ?	55.01.03.0174	del / ***of***	31.01.2020	rev.0	

1.3.3.	???	?????????????????? ?	1	asse, ***axle,***	3° asse, ***3rd axle,***	interconnessione meccanica ***mechanical interconnection***
		oppure / ***or***	2	assi, ***axles,***	1° asse, ***1st axle,***	trasmissione idraulica ***hydraulic trasmission***
					3° asse, ***3rd axle,***	interconnessione meccanica ***mechanical interconnection***

Punto *Item*	Variante *Variant*	Versione *Version*	Descrizione *Description*			
			1° ÷ 2° asse *1st ÷ 2nd axle*	2° ÷ 3° asse *2nd ÷ 3rd axle*	3° ÷ 4° asse *3rd ÷ 4th axle*	
2.1.2.1	???	??CB?????????????P?? ?	2835 mm	1365 mm	1395 mm	
	???	??CB?????????????Q?? ?	2880 mm	1320 mm	1395 mm	
	???	??CB?????????????R?? ?	2790 mm	1410 mm	1395 mm	
	???	??DB?????????????P?? ?	3135 mm	1365 mm	1395 mm	
	???	??DB?????????????Q?? ?	3180 mm	1320 mm	1395 mm	
	???	??DB?????????????R?? ?	3090 mm	1410 mm	1395 mm	
	???	??EB?????????????P?? ?	3435 mm	1365 mm	1395 mm	
	???	??EB?????????????Q?? ?	3480 mm	1320 mm	1395 mm	
	???	??EB?????????????R?? ?	3390 mm	1410 mm	1395 mm	
	???	??FB?????????????P?? ?	3735 mm	1365 mm	1395 mm	
	???	??FB?????????????Q?? ?	3780 mm	1320 mm	1395 mm	
	???	??FB?????????????R?? ?	3690 mm	1410 mm	1395 mm	
	???	??LB?????????????P?? ?	4135 mm	1365 mm	1395 mm	
	???	??LB?????????????Q?? ?	4180 mm	1320 mm	1395 mm	
	???	??LB?????????????R?? ?	4090 mm	1410 mm	1395 mm	
	???	??GB?????????????P?? ?	4335 mm	1365 mm	1395 mm	
	???	??GB?????????????Q?? ?	4380 mm	1320 mm	1395 mm	
	???	??GB?????????????R?? ?	4290 mm	1410 mm	1395 mm	
	???	??HB?????????????P?? ?	4685 mm	1365 mm	1395 mm	
	???	??HB?????????????Q?? ?	4730 mm	1320 mm	1395 mm	
	???	??HB?????????????R?? ?	4640 mm	1410 mm	1395 mm	
			1° ÷ 4° asse *1st ÷ 4th axle*			
2.1.2.2.	???	??CB???????????????? ?	5595 mm			
	???	??DB???????????????? ?	5895 mm			
	???	??EB???????????????? ?	6195 mm			
	???	??FB???????????????? ?	6495 mm			
	???	??LB???????????????? ?	6895 mm			
	???	??GB???????????????? ?	7095 mm			
	???	??HB???????????????? ?	7445 mm			
			1° asse *1st axle*	2° asse *2nd axle*	3° asse *3rd axle*	4° asse *4th axle*
2.3.1.	?A?	?????????????????????? ?	2040 ÷ 2125	2038 ÷ 2060	---	--- mm
	?C?	?????????????????????? ?	2040 ÷ 2125	2038 ÷ 2060	---	2021 mm
2.3.2.	?A?	?????????????????????? ?	---	---	1818	2021 mm
	?C?	?????????????????????? ?	---	---	1818	--- mm
2.7.	I??	?????????????????????? ?	9670			
	2?S	?????????????????????? ?	9670			
	BCS	?????????????????????? ?	10430			
	4CS	?????????????????????? ?	10430			
			1°	2°	3°	4°
2.7.1.	I??	?????????????????????? ?	4720	1420	2180	1350
	2?S	?????????????????????? ?	4720	1420	2180	1350
	B??	?????????????????????? ?	5160	1420	2430	1420
	4CS	?????????????????????? ?	5160	1420	2430	1420
			1°	2°	3°	4°
2.9.	???	????????86B2?80????? ?	8600	7500	12000	8000 kg
	???	????????86B2?75????? ?	8600	7000	12000	7500 kg
	???	????????80B2?80????? ?	8000	7500	12000	8000 kg
	???	????????80B2?75????? ?	8000	7000	12000	7500 kg
	???	????????80B2?67????? ?	8000	6300	12000	6700 kg
	???	?????????75B2?80????? ?	7500	7500	12000	8000 kg
	???	?????????75B2?75????? ?	7500	7000	12000	7500 kg

Punto *Item*	Variante *Variant*	Versione *Version*	Descrizione *Description*					
	???	????????67B2?67????? ?	6700	6300	12000	6700	kg	
	???	?????????71B2?71????? ?	7100	6700	12000	7100	kg	
	???	????????8611?75????? ?	8600	7000	11500	7500	kg	
	???	????????8011?75????? ?	8000	7000	11500	7500	kg	
	???	????????7511?75????? ?	7500	7000	11500	7500	kg	
	???	????????6711?67????? ?	6700	6300	11500	6700	kg	
	???	????????7111?71????? ?	7100	6700	11500	7100	kg	
	???	????????9011?75????? ?	9000	7000	11500	7500	kg	
	???	????????90B2?75????? ?	9000	7000	12000	7500	kg	
	???	????????90B2?80????? ?	9000	7500	12000	8000	kg	

			T_{post} / T_{rear}	
2.10.	???	????????86B2?80????? ?	27000	kg
	???	????????86B2?75????? ?	26500	kg
	???	????????80B2?80????? ?	27000	kg
	???	????????80B2?75????? ?	26500	kg
	???	????????80B2?67????? ?	25000	kg
	???	?????????75B2?80????? ?	27000	kg
	???	?????????75B2?75????? ?	26500	kg
	???	????????67B2?67????? ?	25000	kg
	???	?????????71B2?71????? ?	25800	kg
	???	????????8611?75????? ?	26000	kg
	???	????????8011?75????? ?	26000	kg
	???	????????7511?75????? ?	26000	kg
	???	????????6711?67????? ?	24500	kg
	???	????????7111?71????? ?	25300	kg
	???	????????9011?75????? ?	26000	kg
	???	????????90B2?75????? ?	26500	kg
	???	????????90B2?80????? ?	27000	kg

			??????????????????F ?	??????Z?????????????F ?	??????Q?????????????F ?	??????C?????????????F ?	
			Mcomb (2.11.5.)	40000	44000	60000	kg
			D= 70 ÷	285	285	285	kN
2.11.1.	???	????????86B2?80????F ?	8900 ÷	30330	34330	50330	
	???	????????86B2?75????F ?	8900 ÷	30330	34330	50330	
	???	????????80B2?80????F ?	8900 ÷	30330	34330	50330	
	???	????????80B2?75????F ?	8900 ÷	30330	34330	50330	
	???	????????80B2?67????F ?	9100 ÷	30330	34330	50330	
	???	?????????75B2?80????F ?	8900 ÷	30330	34330	50330	
	???	?????????75B2?75????F ?	9000 ÷	30330	34330	50330	
	???	????????67B2?67????F ?	9200 ÷	30330	34330	50330	
	???	?????????71B2?71????F ?	9100 ÷	30330	34330	50330	
	???	????????8611?75????F ?	8900 ÷	30330	34330	50330	
	???	????????8011?75????F ?	9000 ÷	30330	34330	50330	
	???	????????7511?75????F ?	9000 ÷	30330	34330	50330	
	???	????????6711?67????F ?	9200 ÷	30330	34330	50330	
	???	????????7111?71????F ?	9100 ÷	30330	34330	50330	
	???	????????9011?75????F ?	8900 ÷	30330	34330	50330	
	???	????????90B2?75????F ?	8900 ÷	30330	34330	50330	
	???	????????90B2?80????F ?	8900 ÷	30330	34330	50330	
	???	?????????????????N ?	non ricorre / *not applicable*				

Punto *Item*	Variante *Variant*	Versione *Version*	Descrizione *Description*					
			oppure 3500 kg con rimorchio a frenatura ad inerzia *or 3500 kg with trailer with inertia braking system*					
			??????????????????F ?		??????Z?????????????F ? ??????A?????????????F ? ??????N?????????????F ? ??????P?????????????F ?	??????Q?????????????F ? ??????B?????????????F ? ??????V?????????????F ?	??????C?????????????F ? ??????E?????????????F ? ??????F?????????????F ? ??????R?????????????F ? ??????S?????????????F ?	
			Mcomb (2.11.5.)		40000	44000	60000	kg
			Dc= 68,91	÷	170	170	170	kN
2.11.3.	???	????????86B2?80????F ?	8900	÷	30330	34300	34300	
	???	????????86B2?75????F ?	8900	÷	30330	34300	34300	
	???	????????80B2?80????F ?	8900	÷	30330	34300	34300	
	???	????????80B2?75????F ?	8900	÷	30330	34330	34800	
	???	????????80B2?67????F ?	9100	÷	30330	34330	36400	
	???	?????????75B2?80????F ?	8900	÷	30330	34330	34800	
	???	?????????75B2?75????F ?	9000	÷	30330	34330	35300	
	???	????????67B2?67????F ?	9200	÷	30330	34330	38200	
	???	?????????71B2?71????F ?	9100	÷	30330	34330	36600	
	???	????????8611?75????F ?	8900	÷	30330	34330	34700	
	???	????????8011?75????F ?	9000	÷	30330	34330	35300	
	???	????????7511?75????F ?	9000	÷	30330	34330	35900	
	???	????????6711?67????F ?	9200	÷	30330	34330	38900	
	???	????????7111?71????F ?	9100	÷	30330	34330	37200	
	???	????????9011?75????F ?	8900	÷	30330	34300	34300	
	???	????????90B2?75????F ?	8900	÷	30330	34300	34300	
	???	????????90B2?80????F ?	8900	÷	30330	34300	34300	
	???	?????????????????N ?	non ricorre / *not applicable*					
			oppure 3500 kg con rimorchio a frenatura ad inerzia *or 3500 kg with trailer with inertia braking system*					
2.11.4.	???	?????????????????N ?	vedere punto 2.8 + 3500 kg, con rimorchio con frenatura ad inerzia *see item 2.8 + 3500 kg, with trailer with inertia braking system*					
	???	09??D?Z???????????F ?	40000 kg					
	???	09??D?A???????????F ?	40000 kg					
	???	**09??E?W????????????F ?**	**40000 kg**					
	???	09??D?B???????????F ?	44000 kg					
	???	**09??E?B????????????F ?**	**44000 kg**					
	???	09??D?V???????????F ?	44000 kg					
	???	**09??E?V????????????F ?**	**44000 kg**					
	ICC	G3?????????????????F ?	44000 kg oppure 45000 kg con rapporto al ponte 1:3,36 e pneumatici …/60 R22,5, …/70 R22,5 oppure 50000 kg con rapporti al ponte 1:3,70, 1:4,11 o 1:4,63 e pneumatici …/70 R22,5 o …/80 R22,5. *or 45000 kg with axle ratio 1:3,36 and tyres …/60 R22,5, …/70 R22,5 or 50000 kg with axle ratios 1:3,70, 1:4,11 or 1:4,63 and tyres …/70 R22,5 or …/80 R22,5.*					
	2CC	G3?????????????????F ?	45000 oppure 50000 kg con rapporto al ponte 1:3,70 e pneumatici …/70 R22,5 o 1:4,11 e pneumatici …/70 R22,5 o …/80 R22,5 *or 50000 kg with axle ratio 1:3,70 and tyres …/70 R22,5 or 1:4,11 and tyres …/70 R22,5 or …/80 R22,5.*					
	2CC	G9?????????????????F ?	45000 kg					

Punto *Item*	Variante *Variant*	Versione *Version*	Descrizione *Description*
	???	11??D?C????????????F ?	60000 kg
	???	11??D?E????????????F ?	60000 kg
	???	11??D?F????????????F ?	60000 kg
	???	11??L?F????????????F ?	60000 kg
	???	**11??E?C????????????F ?**	**60000 kg**
	???	**11??E?E????????????F ?**	**60000 kg**
	???	**11??E?F????????????F ?**	**60000 kg**
	???	12??D?R????????????F ?	60000 kg
	???	12??D?S????????????F ?	60000 kg
	???	12??L?S????????????F ?	60000 kg
	???	**12??E?X????????????F ?**	**60000 kg**
	???	**12??E?Y????????????F ?**	**60000 kg**
	???	**12??E?S????????????F ?**	**60000 kg**
2.11.6.	???	??????????????????F ?	750 kg
	???	??????????????????N ?	non ricorre / *not applicable*
2.12.1.	???	??????????????????F ?	1000 kg
	???	??????????????????N ?	non ricorre / *not applicable*

Punto *Item*	Variante *Variant*	Versione *Version*	Descrizione *Description*
3.1.1.	ICC	G3??D?C????????????? ?	F3HFE601B*M
	ICC	G3??D?E????????????? ?	F3HFE601A*M
	2CC	G3??D?E????????????? ?	F3HFE601A*M
	2CC	G9??D?T????????????? ?	F2CFE601F*M
	2CC	G9??D?U????????????? ?	F2CFE601C*M
	2CC	G9??D?V????????????? ?	F2CFE601E*M
	I?S	09??D?Z????????????? ?	F2CFE611D*M
	BCS	09??D?Z????????????? ?	F2CFE611D*M
	I?S	09??D?A????????????? ?	F2CFE611C*M
	BCS	09??D?A????????????? ?	F2CFE611C*M
	I?S	09??D?B????????????? ?	F2CFE611B*M
	BCS	09??D?B????????????? ?	F2CFE611B*M
	I?S	09??D?V????????????? ?	F2CFE611A*M
	BCS	09??D?V????????????? ?	F2CFE611A*M
	2?S	09??D?A????????????? ?	F2CGE611C*N
	4CS	09??D?A????????????? ?	F2CGE611C*N
	2?S	09??D?B????????????? ?	F2CGE611B*N
	4CS	09??D?B????????????? ?	F2CGE611B*N
	2?S	09??D?V????????????? ?	F2CGE611A*N
	4CS	09??D?V????????????? ?	F2CGE611A*N
	2?S	**09??E?B?????????????**	**F2CGE611B*P**
	4CS	**09??E?B?????????????**	**F2CGE611B*P**
	2?S	**09??E?V?????????????**	**F2CGE611A*P**
	4CS	**09??E?V?????????????**	**F2CGE611A*P**
	I?S	11??D?C????????????? ?	F3GFE611F*M
	BCS	11??D?C????????????? ?	F3GFE611F*M
	I?S	11??D?E????????????? ?	F3GFE611E*M
	BCS	11??D?E????????????? ?	F3GFE611E*M
	I?S	11??D?F????????????? ?	F3GFE611G*M
	BCS	11??D?F????????????? ?	F3GFE611G*M
	I?S	11??L?F????????????? ?	F3GFL611D*M
	BCS	11??L?F????????????? ?	F3GFL611D*M
	2?S	11??D?C????????????? ?	F3GGE611C*N
	4CS	11??D?C????????????? ?	F3GGE611C*N
	2?S	11??D?E????????????? ?	F3GGE611B*N
	4CS	11??D?E????????????? ?	F3GGE611B*N
	2?S	11??D?F????????????? ?	F3GGE611A*N
	4CS	11??D?F????????????? ?	F3GGE611A*N
	2?S	11??L?F????????????? ?	F3GGL611A*N
	4CS	11??L?F????????????? ?	F3GGL611A*N
	2?S	**11??E?C?????????????**	**F3GGE611C*P**
	4CS	**11??E?C?????????????**	**F3GGE611C*P**
	2?S	**11??E?E?????????????**	**F3GGE611B*P**
	4CS	**11??E?E?????????????**	**F3GGE611B*P**
	2?S	**11??E?F?????????????**	**F3GGE611A*P**
	4CS	**11??E?F?????????????**	**F3GGE611A*P**
	I?S	12??D?R????????????? ?	F3HFE611G*M
	BCS	12??D?R????????????? ?	F3HFE611G*M
	I?S	12??D?S????????????? ?	F3HFE611F*M
	BCS	12??D?S????????????? ?	F3HFE611F*M
	I?S	12??L?S????????????? ?	F3HFL611D*M
	BCS	12??L?S????????????? ?	F3HFL611D*M
	2?S	12??D?R????????????? ?	F3HGE611B*N
	4CS	12??D?R????????????? ?	F3HGE611B*N
	2?S	12??D?S????????????? ?	F3HGE611A*N
	4CS	12??D?S????????????? ?	F3HGE611A*N
	2?S	12??L?S????????????? ?	F3HGL611A*N
	4CS	12??L?S????????????? ?	F3HGL611A*N
	2?S	**12??E?Y?????????????**	**F3HGE611H*P**

Punto *Item*	Variante *Variant*	Versione *Version*	Descrizione *Description*	
	4CS	**12??E?Y?????????????**	**F3HGE611H*P**	
	2?S	**12??E?S?????????????**	**F3HGE611A*P**	
	4CS	**12??E?S?????????????**	**F3HGE611A*P**	
3.2.1.1.	??C	?????????????????????? ?	accensione comandata / ***positive ignition***	
	??S	?????????????????????? ?	accensione spontanea / ***compression ignition***	
3.2.1.9.	??C	G8?????????????????????? ?	2400 ± 50	min^{-1}
	??C	G9?????????????????????? ?	2400 ± 50	min^{-1}
	??C	G3?????????????????????? ?	2300 ± 50	min^{-1}
	??S	09?????????????????????? ?	2400 ± 50	min^{-1}
	??S	11?????????????????????? ?	2320 ± 50	min^{-1}
	??S	12?????????????????????? ?	2320 ± 50	min^{-1}

Punto
Item

	Tipo cambio ***Gear box type***	9S 131? TO	12AS 142? TD	12AS 193? TD	12AS 233? TD	12AS 233? TO	12AS 253? TO	12TX 141? TD 12TX 181? TD	12TX 201? TD	12TX 221? TD	12TX 242? TD 12TX 262? TD 12TX 282? TD	12TX 181? TO	12TX 201? TO	12TX 221? TO 12TX 241? TO	12TX 241? TO 12TX 261? TO	16S 162? TD	16S 182? TO	16TX 244? TD 16TX 264? TD	16TX 244? TO 16TX 264? TO	16S 222? TO	16S 222? TD 16S 232? TD	16S 252? TO	Allison S3000 Allison S3200	Allison 3200 Allison 3200R	Allison 3500 Allison 3500R
4.5.1.	1	9,48	12,79	15,86	15,86	12,33	12,33	16,69	16,69	16,69	16,69	12,92	12,92	12,92	12,92	16,41	13,80	17,94	14,68	13,80	16,41	13,80	3,49	3,49	4,59
	2	6,58	10,33	12,32	12,32	9,59	9,59	12,92	12,92	12,92	12,92	9,98	9,98	9,98	9,98	13,80	11,54	14,68	12,05	11,54	13,80	11,54	1,86	1,86	2,25
	3	4,70	8,03	9,56	9,56	7,43	7,43	9,93	9,93	9,93	9,93	7,69	7,69	7,69	7,69	11,28	9,49	12,12	9,92	9,49	11,28	9,49	1,41	1,41	1,54
	4	3,48	6,49	7,43	7,43	5,78	5,78	7,69	7,69	7,69	7,69	5,94	5,94	5,94	5,94	9,49	7,93	9,92	8,14	7,93	9,49	7,93	1,00	1,00	1,00
	5	2,62	5,18	5,87	5,87	4,57	4,57	5,90	5,90	5,90	5,90	4,57	4,57	4,57	4,57	7,76	6,53	8,28	6,78	6,53	7,76	6,53	0,75	0,75	0,75
	6	1,89	4,18	4,56	4,56	3,55	3,55	4,57	4,57	4,57	4,57	3,53	3,53	3,53	3,53	6,53	5,46	6,78	5,56	5,46	6,53	5,46	0,65	0,65	0,65
	7	1,35	3,06	3,47	3,47	2,70	2,70	3,66	3,66	3,66	3,66	2,83	2,83	2,83	2,83	5,43	4,57	5,57	4,57	4,57	5,43	4,57			
	8	1,00	2,47	2,70	2,70	2,10	2,10	2,83	2,83	2,83	2,83	2,19	2,19	2,19	2,19	4,57	3,82	4,57	3,75	3,82	4,57	3,82			
	9	0,75	1,92	2,09	2,09	1,63	1,63	2,17	2,17	2,17	2,17	1,68	1,68	1,68	1,68	3,59	3,02	3,93	3,22	3,02	3,59	3,02			
	10		1,55	1,63	1,63	1,27	1,27	1,68	1,68	1,68	1,68	1,30	1,30	1,30	1,30	3,02	2,53	3,22	2,64	2,53	3,02	2,53			
	11		1,24	1,28	1,28	1,00	1,00	1,29	1,29	1,29	1,29	1,00	1,00	1,00	1,00	2,47	2,08	2,65	2,17	2,08	2,47	2,08			
	12		1,00	1,00	1,00	0,78	0,78	1,00	1,00	1,00	1,00	0,77	0,77	0,77	0,77	2,08	1,74	2,17	1,78	1,74	2,08	1,74			
	13															1,70	1,43	1,81	1,49	1,43	1,70	1,43			
	14															1,43	1,20	1,49	1,22	1,20	1,43	1,20			
	15															1,19	1,00	1,22	1,00	1,00	1,19	1,00			
	16															1,00	0,84	1,00	0,82	0,84	1,00	0,84			
	R1	8,97	13,10	14,68	14,68	11,41	11,41	15,54	15,54	15,54	15,54	12,03	12,03	12,03	12,03	15,36	12,92	17,27	14,14	12,92	15,36	12,92	5,03	5,03	5,00
	R2		10,59	11,41	11,41	8,88	8,88	12,03	12,03	12,03	12,03	9,29	9,29	9,29	9,29	12,92	10,80	14,14	11,61	10,80	12,92	10,80			
	R3							3,40	3,40	3,40	3,40	2,64	2,64	2,64	2,64			3,78	3,09						
	R4							2,64	2,64	2,64	2,64	2,04	2,04	2,04	2,04			3,09	2,54						
Rapporto finale: ***Final drive:***		3,2	3,2	3,2	3,2	3,2	3,2	3,2	3,2	3,2	3,2	3,2	3,2	3,2	3,2	3,2	3,2	3,2	3,2	3,2	3,2	3,2	3,2	3,2	3,2

Combinazioni motore / cambio / rapporto al ponte / ripartitore (se applicabile):
Engine / gear box / rear axle ratio / transfer box (if applicable) combinations:

Tipo cambio / *Gear box type*	9S 131? TO	12AS 142? TD	12AS 193? TD	12AS 233? TD	12AS 233? TO	12AS 253? TO	12TX 141? TD 12TX 181? TD	12TX 201? TD	12TX 221? TD	12TX 242? TD 12TX 262? TD 12TX 282? TD	12TX 181? TO	12TX 201? TO	12TX 221? TO 12TX 241? TO	12TX 241? TO 12TX 261? TO	16S 162? TD	16S 182? TO	16TX 244? TD 16TX 264? TD	16TX 244? TO 16TX 264? TO	16S 222? TO	16S 222? TD 16S 232? TD	16S 252? TO	Allison S3000 Allison S3200	Allison 3200 Allison 3200R	Allison 3500 Allison 3500R
F3HFE601B*M F3HFE601A*M												E												
F2CFE611D*M F2CFE611C*M F2CFE611B*M F2CFE611A*M	A B	A B	A B		A B		H I	H I	H I	H I	H I				A B	A B						A B		
F3GFE611F*? F3GFE611E*? F3GFE611G*? F3GFL611D*?			D E	D E	D E		G H	G H	G H	G H		G H	G H						D E		D E			
F3HFE611G*? F3HFL611D*? F3HFE611F*?				E F	E F	E F	G H	G H	G H	G H				G H			G H	G H		E F	E F			
F3GGE611C*N F3GGE611C*N F3GGE611B*N F3GGE611B*N F3GGE611A*N F3GGE611A*N F3GGL611A*N F3GGL611A*N F3GGE611C*P F3GGE611B*P F3GGE611A*P								L M	L M			L M	L M						L M	L M	L M			
F3HGE611B*N F3HGE611B*N F3HGE611A*N F3HGE611A*N F3HGL611A*N F3HGL611A*N F3HGE611H*P F3HGE611A*P										N O				N O			N O	N O		N O	N O			

SCHEDA INFORMATIVA
INFORMATION DOCUMENT

Tipo cambio / *Gear box type*	9S 131? TO	12AS 142? TD	12AS 193? TD	12AS 233? TD	12AS 233? TO	12AS 253? TO	12TX 141? TD 12TX 181? TD	12TX 201? TD	12TX 221? TD	12TX 242? TD 12TX 262? TD 12TX 282? TD	12TX 181? TO	12TX 201? TO	12TX 221? TO 12TX 241? TO	12TX 241? TO 12TX 261? TO	16S 162? TD	16S 182? TO	16TX 244? TD 16TX 264? TD	16TX 244? TO 16TX 264? TO	16S 222? TO	16S 222? TD 16S 232? TD	16S 252? TO	Allison S3000 Allison S3200	Allison 3200 Allison 3200R	Allison 3500 Allison 3500R
F2CGE611C*N F2CGE611B*N F2CGE611A*N F2CGE611B*P F2CGE611A*P							B P				B P				B P	B P							B P	
F2CFE601F*M F2CFE601C*M F2CFE601E*M											Q												Q	Q

Rapporto ponte: / *Rear axle ratio:*	9S 131? TO	12AS 142? TD	12AS 193? TD	12AS 233? TD	12AS 233? TO	12AS 253? TO	12TX 141? TD 12TX 181? TD	12TX 201? TD	12TX 221? TD	12TX 242? TD 12TX 262? TD 12TX 282? TD	12TX 181? TO	12TX 201? TO	12TX 221? TO 12TX 241? TO	12TX 241? TO 12TX 261? TO	16S 162? TD	16S 182? TO
A	2,64	2,85	3,08	3,36	3,70	3,79	4,11									
B	4,23	4,63	4,67	5,01	5,29	6,17	3,40	3,78	3,79	4,125	4,50	5,14	5,56	5,67	6,09	6,57
C	2,64	2,85	3,08	3,09	3,36	3,40	3,70									
D	3,78	3,79	4,23	4,67	2,31	2,47	4,125	4,50	5,01	5,14	5,56	5,67	6,09	6,57		
E	3,08	3,36	3,70	4,11	4,63											
F	3,78	3,79	4,11	4,125	4,23	4,67	2,31	2,47	4,50	5,01	5,14	5,56	5,67	6,09	6,57	
G	2,31	2,47	2,64	2,85	3,08	3,09	3,36									
H	3,40	3,78	3,79	4,125	4,23	4,50	4,67	5,01	5,14	5,56	5,67	6,09	6,57			
I	2,85	3,08	3,36	3,70	4,11	4,63	5,29									
K	2,85	3,08	3,36	3,70	4,11	4,23	4,63	4,67	5,01	5,29	5,56	6,09	6,17	6,59		
L	2,31	2,47	2,64	2,83	2,85	3,08	3,09	3,36	3,70	4,11	4,63	5,29	6,17			
M	3,40	3,78	3,79	4,13	4,23	4,50	4,67	5,01	5,14	5,56	5,67	6,09	6,57			
N	2,31	2,47	2,64	2,83	2,85	3,08	3,09	3,36	3,70	4,11	4,63					
O	3,40	3,78	3,79	4,13	4,23	4,50	4,67	5,01	5,56							
P	2,31	2,47	2,64	2,83	2,85	3,08	3,09	3,36	3,70	3,79	4,11					
Q	3,08	3,36	3,70	4,11	4,63	5,29	6,17									

Ripartitore: / *Transfer box:*										
F	1,00	0,95	0,89	stradale / *on road*	-	1,60	1,62	1,536	fuoristrada / *off road*

Rapporto totale: / *Total ratio:*
= rapporto cambio x rapporto ponte oppure rapporto cambio x rapporto ripartitore x rapporto ponte
= gear box ratio x rear axle ratio or gear box ratio x transfer box ratio x rear axle ratio

Punto *Item*	Variante *Variant*	Versione *Version*	Descrizione *Description*
5.4.	???	?????????????????????? A	2° e 4° asse ***2nd and 4th axle***
	???	?????????????????????? B	4° asse ***4th axle***

Punto *Item*	Variante *Variant*	Versione *Version*	Descrizione *Description*				
6.1.	???	??????????????????? A	10.03.00.0042	rev.2		del / *of*	22.12.2015
			10.03.00.0048	rev.0		del / *of*	27.10.2014
			10.03.00.0063	**rev.0**		**del / of**	**16.01.2021**
			10110001	rev.1		del / *of*	26.04.2018
	???	??????????????????? B	10.03.00.0058	rev.0		del / *of*	09.08.2018
			10.03.00.0064	**rev.0**		**del / *of***	**16.01.2021**
6.2.	???	??????????????????? A	25.01.20.0024	pag. 3 e 4	rev.4	del / *of*	13.07.2020
	???	??????????????????? B	25.01.20.0031	pag. 3 e 4	rev.4	del / *of*	13.07.2020

6.6.1.1.1.

Varianti *Variants*	Versioni *Versions*	Dimensione *Size*	Ind. di carico *Load index*	Carico *Payload*	Indice di vel. *Speed index*	Dim. cerchio *Rim size*	Offset acciaio *Offset steel*	Offset alluminio *Offset aluminium*
???	????????67??????????? ? ????????71??????????? ? ????????75??????????? ? ????????80??????????? ?	385/55 R22,5	158	8500	J - L	22,5 x 11,75	130	120-135
???	??????????????????? ?		160	9000				
???	????????67??????????? ?	315/60 R22,5	150	6700	G - L	22,5 x 9,00	161-162	150-153
???	????????67??????????? ? ????????71??????????? ?		152	7100				
???	????????67??????????? ? ????????71??????????? ? ????????75??????????? ?		154	7500				
???	????????67??????????? ? ????????71??????????? ? ????????75??????????? ? ????????80??????????? ?	385/65 R22,5	158	8500	G - L	22,5 x 11,75	120-135	120-135
???	??????????????????? ?		160	9000				
???	????????67??????????? ?	315/70 R22,5	150	6700	G - M	22,5 x 9,00	161-162	150-154
???	????????67??????????? ? ????????71??????????? ?		152	7100				
???	????????67??????????? ? ????????71??????????? ? ????????75??????????? ?		154	7500				
???	????????67??????????? ? ????????71??????????? ? ????????75??????????? ? ????????80??????????? ?		156	8000				
???	????????67??????????? ?	295/80 R22,5	150	6700	G - M	22,5 x 8,25 22,5 x 9,00	152-159 161-162	145-148 150-154
???	????????67??????????? ? ????????71??????????? ?		152	7100				
???	????????67??????????? ? ????????71??????????? ? ????????75??????????? ?		154	7500				
???	????????67??????????? ?	305/70 R22,5	150	6700	G - M	22,5 x 8,25 22,5 x 9,00	152-159 161-162	145-148 150-154
???	????????67??????????? ? ????????71??????????? ?		152	7100				
???	????????67??????????? ? ????????71??????????? ? ????????75??????????? ?		154	7500				

Punto *Item*	Variante *Variant*	Versione *Version*	Descrizione *Description*						
	???	????????67??????????? ?	315/80 R22,5	150	6700	G - M	22,5 x 9,00	161-162	150-154
	???	????????67??????????? ? ????????71??????????? ?		152	7100				
	???	????????67??????????? ? ????????71??????????? ? ????????75??????????? ?		154	7500				
	???	????????67??????????? ? ????????71??????????? ? ????????75??????????? ? ????????80??????????? ?		156	8000				
	???	????????67??????????? ?	13 R22,5	150	6700	G - M	22,5 x 9,00	161-162	150-154
	???	????????67??????????? ? ????????71??????????? ?		152	7100				
	???	????????67??????????? ? ????????71??????????? ? ????????75??????????? ?		154	7500				
	???	????????67??????????? ? ????????71??????????? ? ????????75??????????? ? ????????80??????????? ?		156	8000				
	???	????????67??????????? ?	12 R22,5	150	6700	G - M	22,5 x 8,25 22,5 x 9,00	145-159	153-162
	???	????????67??????????? ? ????????71??????????? ?		152	7100				
	???	????????67??????????? ?	295/60 R22,5	150 –	6700	G - L	22,5 x 8,25 22,5 x 9,00	152-159 161-162	145-148 150-154
	???	????????67??????????? ? ????????71??????????? ?	355/50 R22,5	152	7100	K - L	22,5 x 11,75	130-135	130-135
	???	????????67??????????? ? ????????71??????????? ? ????????75??????????? ?		154	7500				

6.6.1.1.2.

Varianti *Variants*	Versioni *Versions*	Dimensione *Size*	Ind. di carico *Load index*	Carico *Payload*	Indice di vel. *Speed index*	Dim. cerchio *Rim size*	Offset acciaio *Offset steel*	Offset alluminio *Offset aluminium*
???	??????????????6?????? ? ??????????????71????? ?	315/60 R22,5	150	6700	G - L	22,5 x 9,00	161-162	150-153
???	??????????????6?????? ? ??????????????71????? ? ??????????????75????? ?		152	7100				
???	??????????????6?????? ? ??????????????71????? ? ??????????????75????? ? ??????????????80????? ?		154	7500				
???	??????????????6?????? ? ??????????????71????? ?	315/70 R22,5	150	6700	G - M	22,5 x 9,00	161-162	150-154
???	??????????????6?????? ? ??????????????71????? ? ??????????????75????? ?		152	7100				
???	??????????????6?????? ? ??????????????71????? ? ??????????????75????? ? ??????????????80????? ?		154	7500				
???	??????????????6?????? ? ??????????????71????? ? ??????????????75????? ? ??????????????80????? ?		156	8000				

Punto *Item*	Variante *Variant*	Versione *Version*	Descrizione *Description*						
	???	??????????????67????? ? ??????????????71????? ?	295/80 R22,5	150	6700	G - M	22,5 x 8,25 22,5 x 9,00	152-159 161-162	145-148 150-154
	???	??????????????67????? ? ??????????????71????? ? ??????????????75????? ?		152	7100				
	???	??????????????67????? ? ??????????????71????? ? ??????????????75????? ? ??????????????80????? ?		154	7500				
	???	??????????????67????? ? ??????????????71????? ?	305/70 R22,5	150	6700	G - M	22,5 x 8,25 22,5 x 9,00	152-159 161-162	145-148 150-154
	???	??????????????67????? ? ??????????????71????? ? ??????????????75????? ?		152	7100				
	???	??????????????67????? ? ??????????????71????? ? ??????????????75????? ? ??????????????80????? ?		154	7500				
	???	??????????????67????? ? ??????????????71????? ?	315/80 R22,5	150	6700	G - M	22,5 x 9,00	161-162	150-154
	???	??????????????67????? ? ??????????????71????? ? ??????????????75????? ?		152	7100				
	???	??????????????67????? ? ??????????????71????? ? ??????????????75????? ? ??????????????80????? ?		154	7500				
	???	??????????????67????? ? ??????????????71????? ?		156	8000				
	???	??????????????67????? ? ??????????????71????? ?	295/60 R22,5	150 –	6700	G - L	22,5 x 8,25 22,5 x 9,00	152-159 161-162	145-148 150-154
	???	??????????????67????? ? ??????????????71????? ?	13 R22,5	150	6700	G - M	22,5 x 9,00	161-162	150-154
	???	??????????????67????? ? ??????????????71????? ? ??????????????75????? ?		152	7100				
	???	??????????????67????? ? ??????????????71????? ? ??????????????75????? ? ??????????????80????? ?		154	7500				
	???	??????????????67????? ? ??????????????71????? ? ??????????????75????? ? ??????????????80????? ?		156	8000				
	???	??????????????67????? ? ??????????????71????? ?	12 R22,5	150	6700	G - M	22,5 x 8,25 22,5 x 9,00	145-159	153-162
	???	??????????????67????? ? ??????????????71????? ? ??????????????75????? ?		152	7100				
	???	??????????????67????? ? ??????????????71????? ? ??????????????75????? ? ??????????????80????? ?	385/55 R22,5	158	8500	J - L	22,5 x 11,75	130	120-135
	???	??????????????67????? ? ??????????????71????? ? ??????????????75????? ? ??????????????80????? ?		160	9000				

Punto *Item*	Variante *Variant*	Versione *Version*	Descrizione *Description*						
	???	??????????????67????? ? ??????????????71????? ? ??????????????75????? ? ??????????????80????? ?	385/65 R22,5	158	8500	G - L	22,5 x 11,75	120-135	120-135
	???	??????????????67????? ? ??????????????71????? ? ??????????????75????? ? ??????????????80????? ?		160	9000				
	???	??????????????67????? ? ??????????????71????? ? ??????????????75????? ?	355/50 R22,5	152	7100	K - L	22,5 x 11,75	130-135	130-135
	???	??????????????67????? ? ??????????????71????? ? ??????????????75????? ? ??????????????80????? ?		154	7500				

6.6.1.1.3.

Varianti *Variants*	Versioni *Versions*	Dimensione *Size*	Ind. di carico *Load index*	Carico *Payload*	Indice di vel. *Speed index*	Dim. cerchio *Rim size*	Offset acciaio *Offset steel*	Offset alluminio *Offset aluminium*
???	??????????11???????? ?	315/80 R22,5	145	11600	G - M	22,5 x 9,00	161-162	150-154
???	??????????11???????? ? ??????????B2???????? ?		147	12300				
???	??????????11???????? ?	315/60 R22,5	145	11600	G - L	22,5 x 9,00	161-162	150-153
???	??????????11???????? ? ??????????B2???????? ?		147	12300				
???	??????????11???????? ?	315/70 R22,5	145	11600	G - M	22,5 x 9,00	161-162	150-154
???	??????????11???????? ? ??????????B2???????? ?		147	12300				
???	??????????11???????? ?	305/70 R22,5	145	11600	G - M	22,5 x 8,25 22,5 x 9,00	152-159 161-162	145-148 150-154
???	??????????11???????? ? ??????????B2???????? ?		147	12300				
???	??????????11???????? ?	295/80 R22,5	145	11600	G - M	22,5 x 8,25 22,5 x 9,00	152-159 161-162	145-148 150-154
???	??????????11???????? ? ??????????B2???????? ?		147	12300				
???	??????????11???????? ?	13 R22,5	145	11600	G - M	22,5 x 9,00	161-162	150-154
???	??????????11???????? ? ??????????B2???????? ?		147	12300				
???	??????????11???????? ?	12 R22,5	145	11600	G - M	22,5 x 8,25 22,5 x 9,00	145-159	153-162
???	??????????11???????? ? ??????????B2???????? ?		147	12300				
???	??????????11???????? ?	295/60 R22,5	145	11600	G - L	22,5 x 8,25 22,5 x 9,00	152-159 161-162	145-148 150-154
???	??????????11???????? ? ??????????B2???????? ?		147	12300				

6.6.1.1.4.

Varianti *Variants*	Versioni *Versions*	Dimensione *Size*	Ind. di carico *Load index*	Carico *Payload*	Indice di vel. *Speed index*	Dim. cerchio *Rim size*	Offset acciaio *Offset steel*	Offset alluminio *Offset aluminium*
???	??????????????67????? ?	315/60 R22,5	150	6700	G - L	22,5 x 9,00	161-162	150-153
???	??????????????67????? ? ??????????????71????? ?		152	7100				
???	??????????????67????? ? ??????????????71????? ? ??????????????75????? ?		154	7500				

Punto *Item*	Variante *Variant*	Versione *Version*	Descrizione *Description*						
	???	??????????????67????? ?	315/70 R22,5	150	6700	G - M	22,5 x 9,00	161-162	150-154
	???	??????????????67????? ? ??????????????71????? ?		152	7100				
	???	??????????????67????? ? ??????????????71????? ? ??????????????75????? ?		154	7500				
	???	??????????????67????? ? ??????????????71????? ? ??????????????75????? ? ??????????????80????? ?		156	8000				
	???	??????????????67????? ?	295/80 R22,5	150	6700	G - M	22,5 x 8,25 22,5 x 9,00	152-159 161-162	145-148 150-154
	???	??????????????67????? ? ??????????????71????? ?		152	7100				
	???	??????????????67????? ? ??????????????71????? ? ??????????????75????? ?		154	7500				
	???	??????????????67????? ?	305/70 R22,5	150	6700	G - M	22,5 x 8,25 22,5 x 9,00	152-159 161-162	145-148 150-154
	???	??????????????67????? ? ??????????????71????? ?		152	7100				
	???	??????????????67????? ? ??????????????71????? ? ??????????????75????? ?		154	7500				
	???	??????????????67????? ?	315/80 R22,5	150	6700	G - M	22,5 x 9,00	161-162	150-154
	???	??????????????67????? ? ??????????????71????? ?		152	7100				
	???	??????????????67????? ? ??????????????71????? ? ??????????????75????? ?		154	7500				
	???	??????????????67????? ? ??????????????71????? ? ??????????????75????? ? ??????????????80????? ?		156	8000				
	???	??????????????67????? ?	295/60 R22,5	150 –	6700	G - L	22,5 x 8,25 22,5 x 9,00	152-159 161-162	145-148 150-154
	???	??????????????67????? ?	13 R22,5	150	6700	G - M	22,5 x 9,00	161-162	150-154
	???	??????????????67????? ? ??????????????71????? ?		152	7100				
	???	??????????????67????? ? ??????????????71????? ? ??????????????75????? ?		154	7500				
	???	??????????????67????? ? ??????????????71????? ? ??????????????75????? ? ??????????????80????? ?		156	8000				
	???	??????????????67????? ?	12 R22,5	150	6700	G - M	22,5 x 8,25 22,5 x 9,00	145-159	153-162
	???	??????????????67????? ? ??????????????71????? ?		152	7100				
	???	??????????????67????? ? ??????????????71????? ? ??????????????75????? ? ??????????????80????? ?	385/55 R22,5	158	8500	J - L	22,5 x 11,75	130	120-135
	???	??????????????67????? ? ??????????????71????? ? ??????????????75????? ? ??????????????80????? ?		160	9000				

Punto *Item*	Variante *Variant*	Versione *Version*	Descrizione *Description*						
	???	??????????????67????? ? ??????????????71????? ? ??????????????75????? ? ??????????????80????? ?	385/65 R22,5	158	8500	G - L	22,5 x 11,75	120-135	120-135
	???	??????????????67????? ? ??????????????71????? ? ??????????????75????? ? ??????????????80????? ?		160	9000				
	???	??????????????67????? ? ??????????????71????? ?	355/50 R22,5	152	7100	K - L	22,5 x 11,75	130-135	130-135
	???	??????????????67????? ? ??????????????71????? ? ??????????????75????? ?		154	7500				

6.6.2.1.

Dimensione ***Size***	Raggio di rotolamento ***Rolling radii***	Circonferenza di rotolamento ***Rolling circumference***	Pressione (^) ***Pressure (^)***
295/60 R22,5	446 mm	2806 mm	900 kPa
355/50 R22,5	450 mm	2812 mm	900 kPa
315/60 R22,5	458 mm	2879 mm	900 kPa
385/55 R22,5	480 mm	3018 mm	900 kPa
305/70 R22,5	486 mm	3050 mm	900 kPa
315/70 R22,5	492 mm	3093 mm	850 ÷ 900 kPa
295/80 R22,5	507 mm	3184 mm	850 ÷ 900 kPa
385/65 R22,5	517 mm	3248 mm	850 kPa
315/80 R22,5	523 mm	3282 mm	875 kPa
12 R22,5	526 mm	3306 mm	850 ÷ 900 kPa
13 R22,5	546 mm	3428 mm	900 kPa

(^): in funzione del carico massimo ammesso
(^): according to permissible load

Punto *Item*	Variante *Variant*	Versione *Version*	Descrizione *Description*
8.2.1.	???	?????????????????F ?	pneumatico a pedale, a 3 circuiti indipendenti uno per 1° asse, uno per 2°, 3° e 4° asse, ed uno per il rimorchio *pneumatic (compressed air), 3 independent circuits* *one for 1st axles, one for 2nd, 3rd and 4tc axles, and one for the trailer* Schema impianto frenante: *Brake system layout:*
	???	?????????????????F A	25.01.20.0024 pag. 1 rev.4 del / *of* 13.07.2020
	???	?????????????????F B	25.01.20.0031 pag. 1 rev.4 del / *of* 13.07.2020
	???	?????????????????N ?	pneumatico a pedale, a 2 circuiti indipendenti uno per 1° asse, uno per 2°, 3° e 4° asse *pneumatic (compressed air), 2 independent circuits* *one for 1st axles, one for 2nd, 3rd and 4td axles* Schema impianto frenante: *Brake system layout:*
	???	?????????????????N A	25.01.20.0024 pag. 2 rev.4 del / *of* 13.07.2020
	???	?????????????????N B	25.01.20.0031 pag. 2 rev.4 del / *of* 13.07.2020

Funzionamento del sistema di controllo di stabilità

Il controllo di stabilità ESP è un sistema di controllo di stabilità non solo nella dinamica longitudinale del veicolo ma specialmente in casi critici di marcia in curva quando sono raggiunti e superati i limiti di stabilità del veicolo.
L'ESP utilizza sensori per la rilevazione dell'angolo del volante, della velocità angolare attorno all'asse verticale (tasso di imbardata) e dell'accelerazione laterale ed un software per l'elaborazione dati, verifica e controllo delle dinamiche laterali del veicolo.
La logica di funzionamento dell'ESP può essere divisa in 2 blocchi: controllo di imbardata e controllo di stabilità al rollio.
In entrambi i casi l'ESP cerca di fornire un momento stabilizzante tramite l'attivazione automatica unilaterale dei freni di una singola ruota o di una ruota del gruppo di assi (l'asse aggiunto non è "controllato"), per riportare il veicolo nella giusta direzione. A questo scopo l'ESP controlla sia l'angolo di slittamento del veicolo ed il suo gradiente, sia la deviazione tra quanto richiesto dal conducente e il tasso di imbardata attuale del veicolo. In aggiunta, allo scopo di decelerare il veicolo, la coppia motore viene ridotta ed i freni del rimorchio azionati.
Tutti i componenti dell'ESP sono quelli del veicolo originale 6x2, invariati e non spostati. In particolare il Modulo di Controllo della Stabilità (Wabco 446 065 073 0, appr. E1 10R-031831), che contiene i sensori per valutare il tasso di imbardata e l'accelerazione laterale del veicolo, rimane nella sua posizione originale, in prossimità del centro di gravità del veicolo.

Operation of the stability control system

The stability control provides means of vehicle control not only of longitudinal vehicle dynamics but especially of critical cornering situations when driving stability limits are approached or even exceeded.
ESP uses sensors for steering wheel angle, angular velocity around vertical axis (yaw rate) and lateral acceleration plus software for signal processing.
ESP control strategies is split into two features: yaw control and roll stability control.
In both cases ESP will try to build up a yawing momentum by automatic unilateral activation of single wheel brakes or a wheel brakes of an axle group (the added axle isn't "active") to turn the vehicle back to the appropriate direction. In this respect ESP controls the sli angle and its gradient as well as the deviation between driver demand and actual vehicle yaw rate. For purpose of supporting vehicle deceleration also the engine torque will be reduced and the trailer brakes addionally applied.
All the components of ESP are original (of 6x2 vehicle), unchanged and not moved. Expecially the Stability Control Module (Wabco 446 065 073 0, appr. E1 10R-031831), that contains sensors for yaw rate and lateral acceleration of the vehicle, remains in the original position, near to the vehicle centre of gravity.

Descrizione del sistema LDWS

Il sistema LDWS deve avvisare i conducenti stanchi o distratti quando il loro veicolo lascia involontariamente la corsia di marcia.
Il sistema consiste in una telecamera montata dietro al parabrezza del veicolo. Il sensore rileva le diverse strisce che delimitano la corsia e calcola la posizione del veicolo in riferimento ai segni rilevati.
Se il veicolo sta per abbandonare la corsia senza che il conducente manifesti l'intenzione di cambiarla (senza attivare l'indicatore delle luci) viene generato un suono per avvisare il conducente.

Punto *Item*	Variante *Variant*	Versione *Version*	Descrizione *Description*

Il suono viene generato dagli altoparlanti sinistro o destro a seconda della direzione di deriva.
Il sistema funziona a velocità del veicolo > 55 km/h.
Per consentire al guidatore di controllare il sistema questo può essere disattivato da un interruttore.
Dopo l'attivazione il sistema è sempre attivo indipendentemente dal suo stato precedente.
L'utente deve essere consapevole del fatto che in alcune situazioni, a causa di particolari condizioni ambientali il sistema non può riconoscere le corsie.
Le prestazioni e la precisione del sistema LDWS dipende dal campo visivo della strada da parte della telecamera.
Questi incroci sono influenzati dall'inclinazione del parabrezza e dall'altezza di installazione.
La telecamera può essere installata da 1.4 a 2,6 m con parabrezza inclinato da 0° a 50°. La telecamera può essere installata con uno spostamento laterale massimo di +/- 1 m.
Tutti i componenti dell'LDWS sono quelli del veicolo originale 6x2, invariati e non spostati.

LDWS description
The LDWS shall alert tired or inattentive drivers when their unintentionally leaves the current lane of travel.
The system consist of a camera sensor mounted at the vehicle windshield. The sensor detects different types of lane makings and calculates the position of the vehicle in reference to the detected markings. If the vehicle drifts in the direction of one marking and no active driver intention to change the lane can be detected (direction light active) a rumble strip sound is generated to alert the driver.
The sound is generated in the left or right speakers depending on the direction of drift.
The system operates at vehicle speeds > 55 km/h.
To allow the driver control over the system it can be disabled by a switch. After ignition activation the system is always active independent of it's prior state.
Customer needs to be aware that in some situations, due to environment conditions the system cannot track lanes.
The performance and precision of the LDWS depends on the minimum and maximum road intersection of the cameras field of view. This intersections are impacted by windscreen inclination and installation height. The camera can be installed from 1.4 to 2.6 m with windscreen inclination from 0° to 50°. The camera can be installed with a maximum lateral displacement from +/- 1 m.
All the components of LDWS are original (of 6x2 vehicle), unchanged and not moved.

Descrizione del sistema AEBS
Lo scopo dell'AEBS è quello di ridurre gli incidenti provocati da conducenti distratti o colpiti da un colpo di sonno, che impattano contro un veicolo davanti ad essi.
Gli impatti sono ridotti utilizzando un sistema (radarsensor) che misura la distanza dal veicolo che precede; con queste informazioni il sistema può calcolare il tempo potenziale di collisione e attivare i freni autonomamente.
Un intervento tipico dell'AEBS si compone di 3 fasi consecutive:
1. segnale di avvertimento ottico e acustico
2. avvertimento tattile (colpo del freno)
3. frenata d'emergenza

Il conducente sarà avvertito da un segnale acustico, da un'icona e da uno colpo del freno prima che venga attivata la frenata d'emergenza.
Il conducente è sempre in grado di annullare il sistema di incremento di valore del pedale dell'acceleratore, l'attivazione delle luci o dello sterzo (lasciando il percorso di collisione). La frenata del conducente darà conferma al sistema e il sistema si adotterà per ottenere la decelerazione richiesta del veicolo.
Il veicolo che segue sarà avvertito dall'attivazione delle luci dei freni, se la decelerazione è al di sopra di una soglia critica.
Se risultano attivi guasti nel rilevare le prestazioni, il sistema si disabiliterà e al conducente verrà visualizzata un'ICONA nella strumentazione.
Il sistema funziona a velocità comprese tra 15 e 90 km/h.
Il radarsensor verrà installato al centro del veicolo nella zona del paraurti anteriore ad altezze comprese fra 0,3 e 1,0 m.
Tutti i componenti dell'AEBS sono quelli del veicolo originale 6x2, invariati e non spostati.

AEBS description
Purpose of the AEBS is to reduce the impact of accidents cause by unattended drivers that were distracted or felt a sleep and hit a vehicle driving in front of them self.
The impacts shall be reduced by utilizing a system (radarsensor) that measures the distance to the vehicle ahead, with this information the system can calculate potential time to collision and activate the brakes autonomously by requesting to the brakes if an impact is unavoidable.
A typical AEBS intervention consists of 3 escalating steps:

Punto *Item*	Variante *Variant*	Versione *Version*	Descrizione *Description*

1. optic and acoustic warning
2. haptic warning (brake jerk)
3. emergency braking
The driver will be warned by a buzzer, icon and a brake jerk before emergency braking is activated.
The driver is always able to override the system by accelerator pedal value increase, turnlight activation or steering (leaving the collision path). Braking of the driver will confirm the system and the system will adopt required vehicle deceleration.
The following traffic will be warned by activated brake lights, if deceleration is above a critical threshold the brake lights.
If performance relevant faults are active the system will be shutoff and the driver will see an ICON in the instrument cluster.
The system will work from speeds between 15 and 90 km/h.
The radarsensor will be installed in the vehicle center in the area of the front bumper at heights 0,3 m till 1,0 m.
All the components of AEBS are original (of 6x2 vehicle), unchanged and not moved.

8.8. **Calcolo del sistema di frenatura (2° asse)**
Calculation of the braking system (2nd axle)

Raggio efficace: *Effectrive radius:*	Rt	175	mm
Corsa massima della molla: *Piston max stroke:*		64	mm
Corsa di lavoro della molla: *Piston working stroke:*		25 - 35	mm
Pressione di calcolo: *Calculation pressure:*	Db	8	bar
Pressione di accostamento dei freni: *Const. response pressure:*	Da	0,35	bar
Caratteristica del freno: *Characteristic of wheel brake:*	C*	0,76	
Coefficiente di attrito della guarnizione: *Friction coefficient:*	μ	0,38	
Superficie della guarnizione freno per asse: *Friction area per axle:*	A	816	cm^2
Rendimento meccanico del freno: *Mechanical efficiency:*	η	0,95	
Rapporto rispetto all'azionamento del freno: *Complete ratio of the mechanic:*	Iz	14,82	
Numero freni per asse: *Number of brakes per axle:*	Na	2	
Rapporti di leva: *Lever ratio:*	ih	15,6	
Tipo di cilindro freno: *Brake cylinder type:*	SQIN	12"	
Forza nel cilindro dovuta alla pressione di calcolo: *Cylinder force at calculation pressure:*	Fc	5400	N
Forza di accostamento del freno: *response force of the brake:*	Fa	65	N
Momento frenante per ruota: *Brake torque per wheel brake:*	Mb	10516	Nm

Punto *Item*	**Variante** *Variant*	**Versione** *Version*	**Descrizione** *Description*							
	Pneumatici *Tyre*		Raggio *Radius*			Rapporti rispetto al piano stradale *Reaction to street*			Forza freno 2° asse *Brake force 2nd axle*	
	295/60 R22,5	R =	428	mm	If =	4,61		Ti =	49138	N
	355/50 R22,5	R =	433	mm	If =	4,55		Ti =	48571	N
	315/60 R22,5	R =	442	mm	If =	4,46		Ti =	47582	N
	385/55 R22,5	R =	461	mm	If =	4,28		Ti =	45621	N
	305/70 R22,5	R =	462	mm	If =	4,27		Ti =	45522	N
	315/70 R22,5	R =	467	mm	If =	4,22		Ti =	45035	N
	295/80 R22,5	R =	487	mm	If =	4,05		Ti =	43185	N
	385/65 R22,5	R =	497	mm	If =	3,97		Ti =	42316	N
	315/80 R22,5	R =	500	mm	If =	3,94		Ti =	42062	N
	12 R22,5	R =	504	mm	If =	3,91		Ti =	41729	N
	13 R22,5	R =	521	mm	If =	3,78		Ti =	40367	N

Disegno per omologazione
Drawing for type-approval

Varianti/variants	Versioni/versions	A	B
I??	??CB?????????????P?? ?	2835	1365
I??	??CB?????????????Q?? ?	2880	1320
I??	??CB?????????????R?? ?	2790	1410

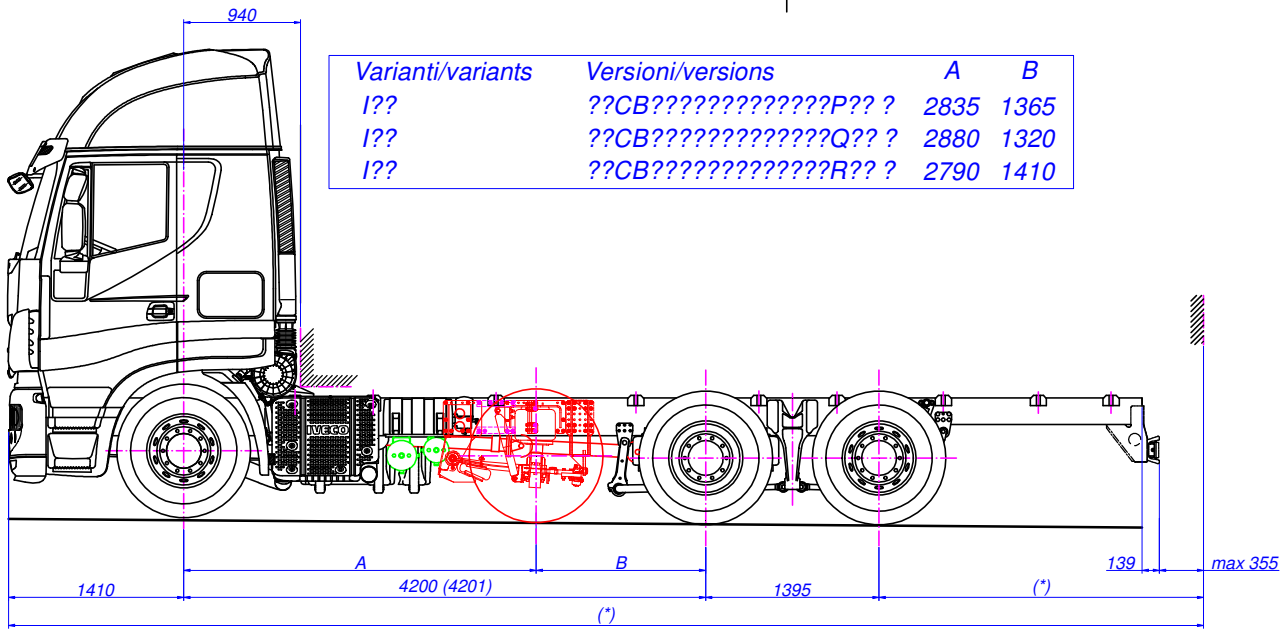

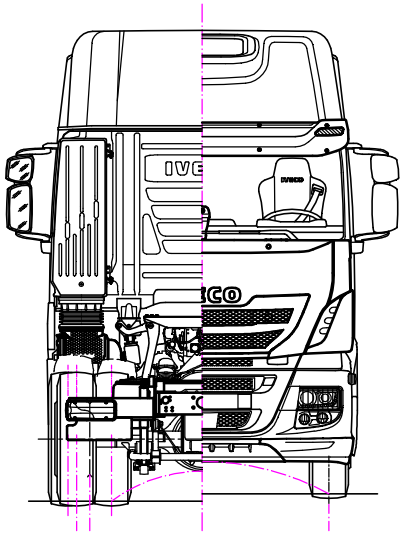

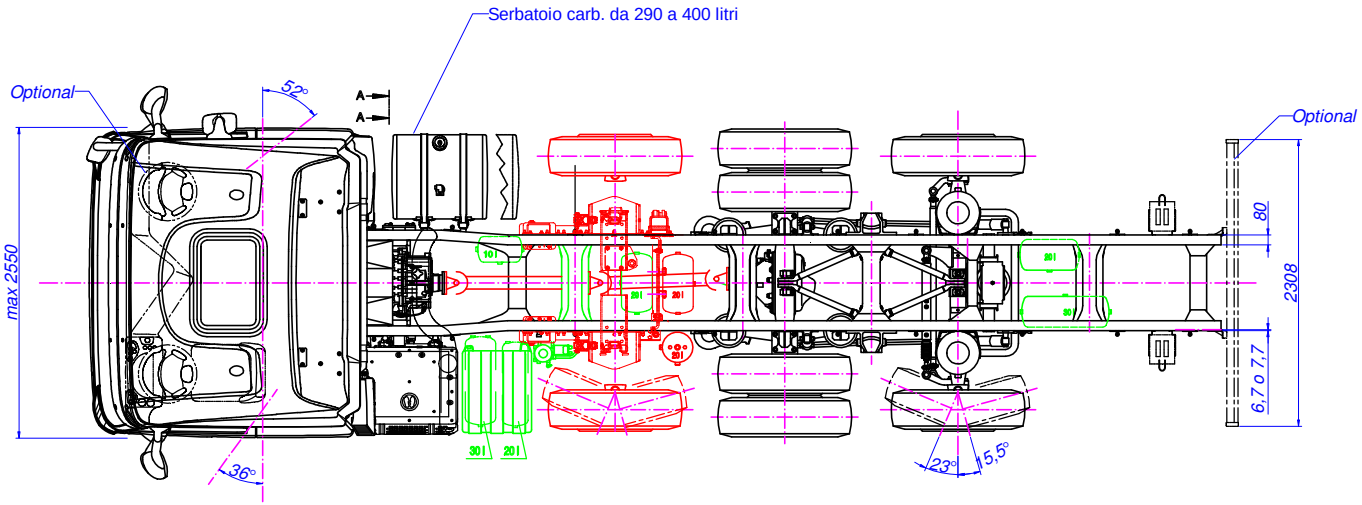

Nota (*): vedere scheda informativa
Note (*): see information document

Vista A / View A

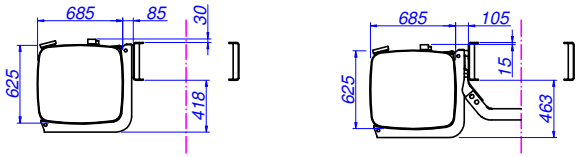

Rev. 3 del 24.11.2015 : aggiunto foglio 2 (solo per schema produzione) - PT
Rev. 2 del 12.01.2015 : aggiornato cartiglio - PT
Rev. 1 del 21.10.2014 : aggiunte versioni con interasse (2°+3° asse) di 1320 mm e 1410 mm - PT

Pos.	Q.tà	Designazione, materiale, dimensione, ecc.					Codice	Modifiche
Materiale		Unificazione	Trattamento	Caratteristiche meccaniche	Massa kg	Unità di misura lineari: mm angoli:°sessagesimali	Codice grezzo	Formato disegno .....
Disegnato da P. Toppano		Controllato da P. Martini	Data 19.09.2013	Scala	Quote senza indicazione di tolleranza secondo tabella UNI EN 22768/1, con grado di precisione medio			Codice fornitore .....

S.T. System Truck S.p.A.
via Paesa, 28 - I 46048 Roverbella (MN)
tel. +39 0376 696809 - info@stsystemtruck.com

TITOLO: FIGURINO IVECO STRALIS AS 260 YPS EURO 6
CONF. 1+3 - PASSO 4200 MM - TIPO: ST 2Y3C

N° DISEGNO	Modifica	Foglio
55.01.03.0031	3 - 24.11.2015	1/1

E24*13R11/18*0056*02

Disegno per omologazione
Drawing for type-approval

Varianti/variants	Versioni/versions	A	B
I??	??CB?????????????P?? ?	2835	1365
I??	??CB?????????????Q?? ?	2880	1320
I??	??CB?????????????R?? ?	2790	1410

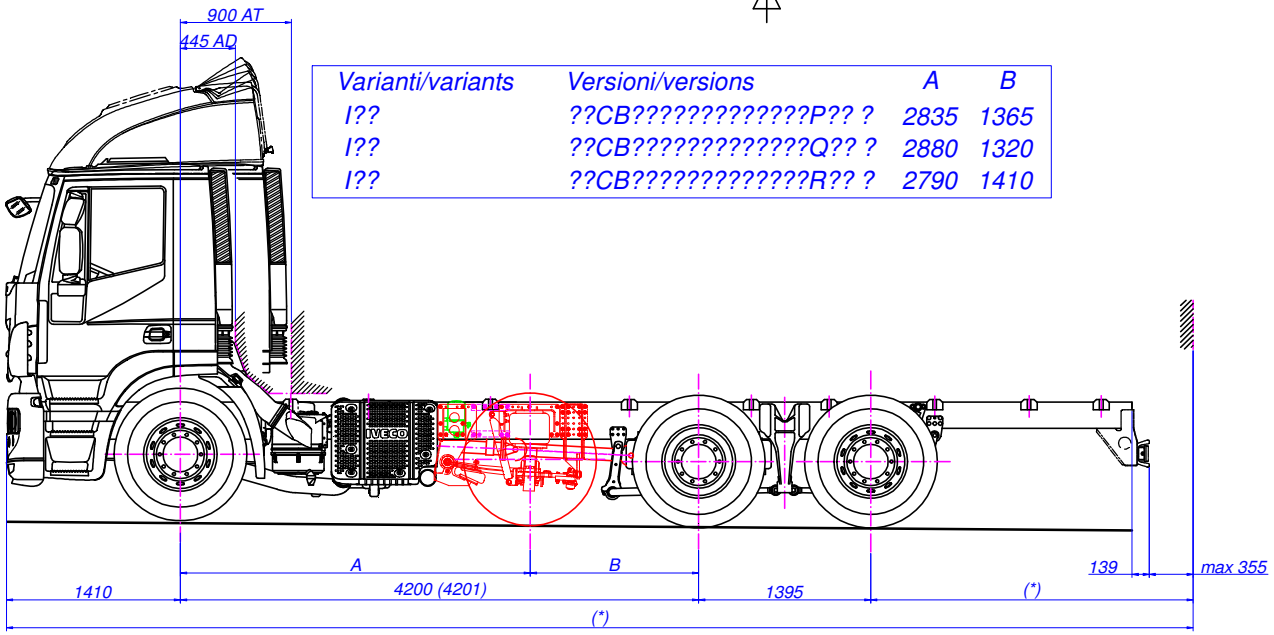

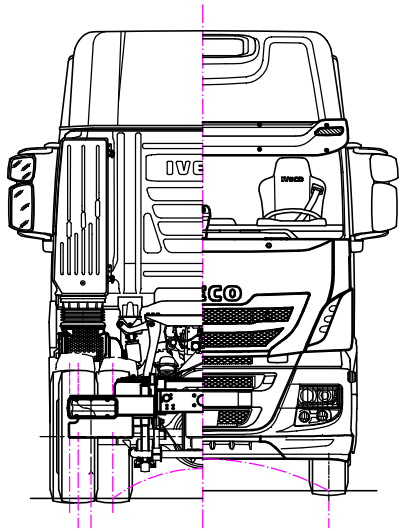

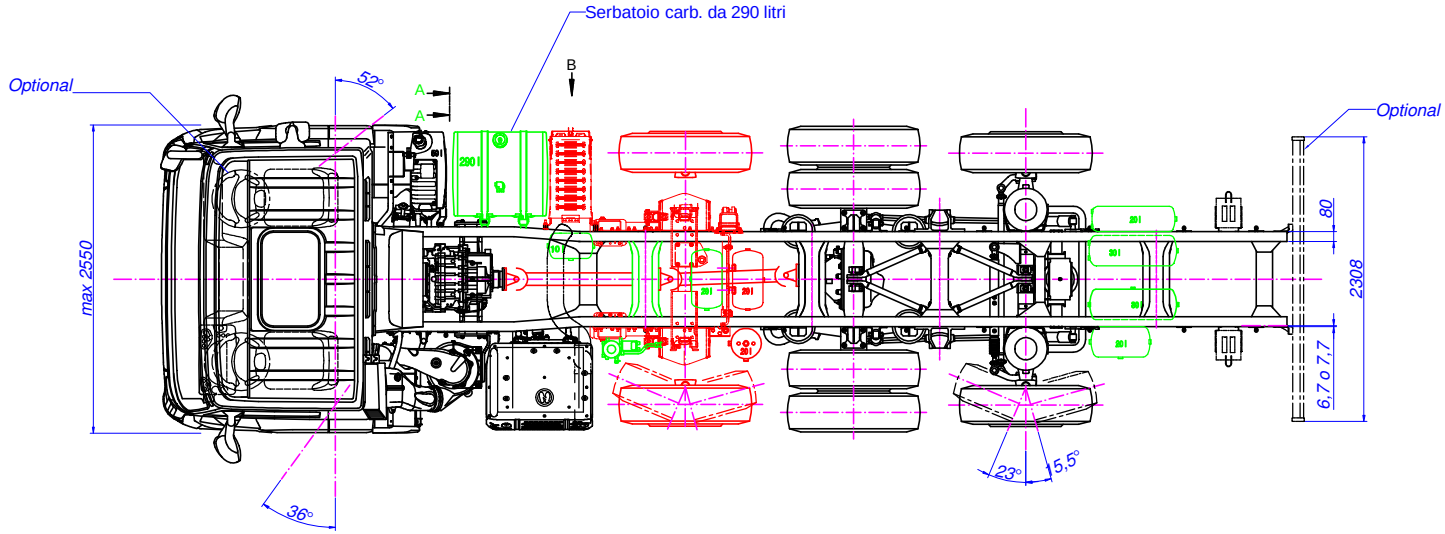

Nota (*): vedere scheda informativa
Note (*): see information document

Vista A / View A

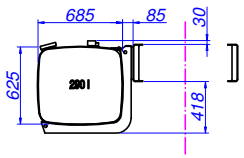

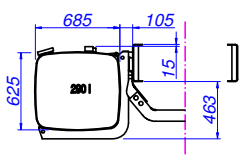

Vista B / View B

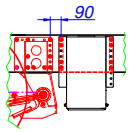

Rev. 2 del 12.01.2015 : aggiornato cartiglio - PT
Rev. 1 del 21.10.2014 : aggiunte versioni con interasse (2°÷3° asse) di 1320 mm e 1410 mm - PT

Pos.	Q.tà	Designazione, materiale, dimensione, ecc.	Codice	Modifiche

Materiale	Unificazione	Trattamento	Caratteristiche meccaniche	Massa kg	Unità di misura lineari: mm angoli:°sessagesimali	Codice grezzo	Formato disegno
.....	.....	.....	.....	.....		.....	.....

Disegnato da	Controllato da	Data	Scala	Quote senza indicazione di tolleranza secondo tabella UNI EN 22768/1, con grado di precisione medio	Codice fornitore
P. Toppano	P. Martini	19.09.2013	.....		.....

S.T. System Truck S.p.A.
via Paesa, 28 - I 46048 Roverbella (MN)
tel. +39 0376 696809 - info@stsystemtruck.com

TITOLO
FIGURINO IVECO STRALIS AD/AT 260 YPS EURO 6
CONF. 1+3 - PASSO 4200 MM - TIPO: ST 2Y3C

N° DISEGNO	Modifica	Foglio
55.01.03.0032	2 - 12.01.2015	1/1

E24*13R11/18*0056*02

Disegno per omologazione
Drawing for type-approval

Varianti/variants	Versioni/versions	A	B
I??	??DB?????????????P?? ?	3135	1365
I??	??DB?????????????Q?? ?	3180	1320
I??	??DB?????????????R?? ?	3090	1410

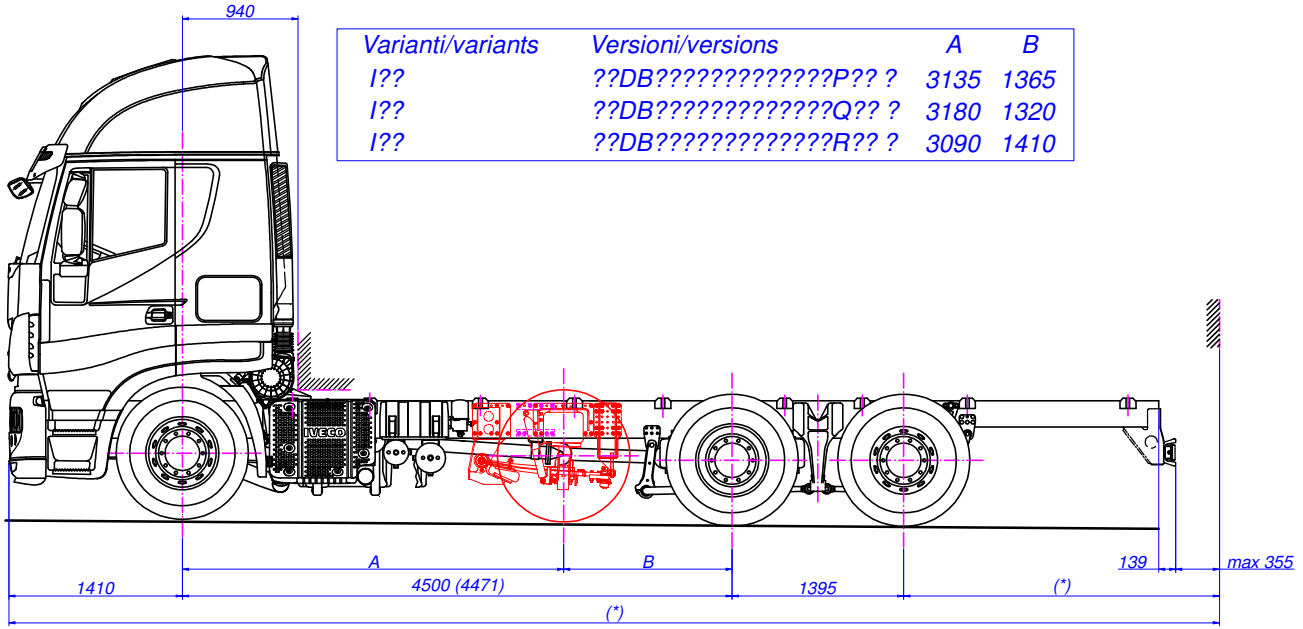

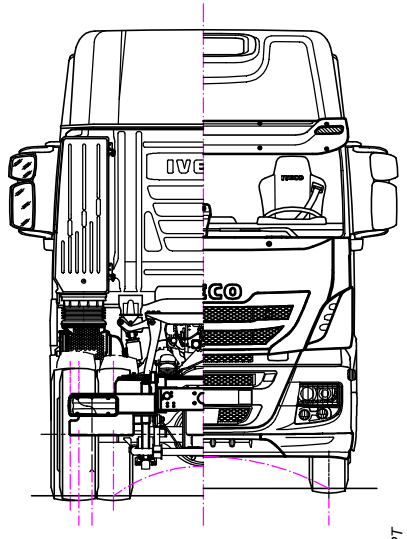

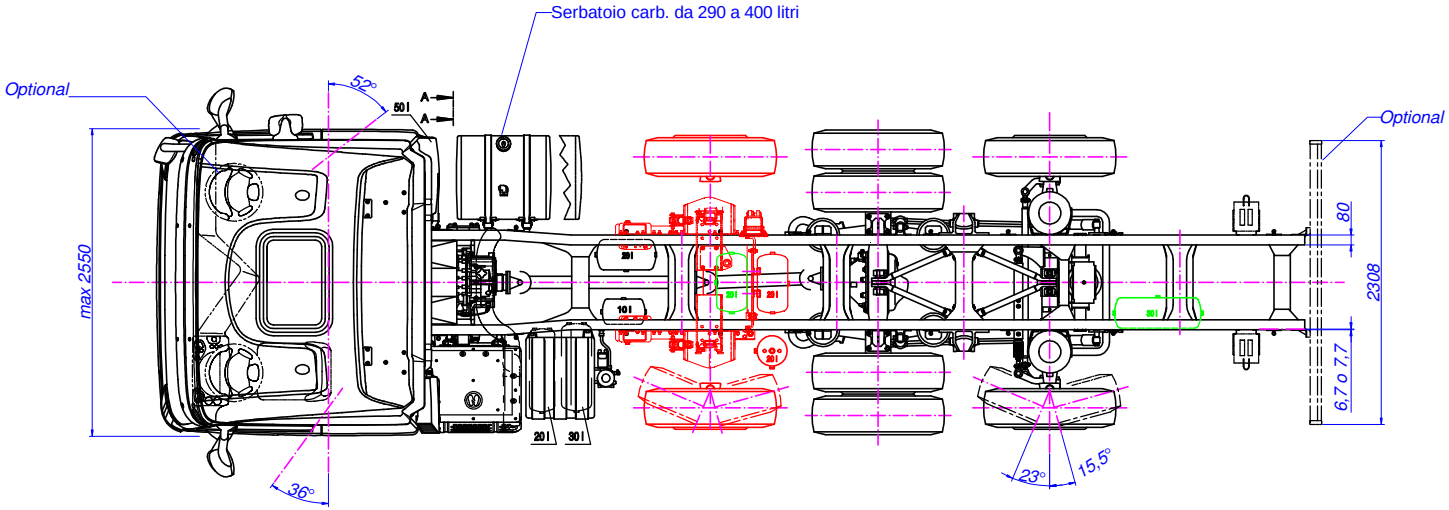

Nota (*): vedere scheda informativa
Note (*): see information document

Vista A / View A

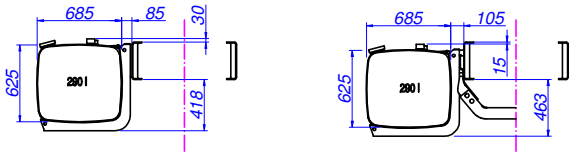

Rev. 3 del 22.04.2015 : aggiunti fazzoletti cod. 01200115 - PT
Rev. 2 del 12.01.2015 : aggiornato cartiglio - PT
Rev. 1 del 21.10.2014 : aggiunte versioni con interasse (2°+3° asse) di 1320 mm e 1410 mm - PT

Pos.	Q.tà	Designazione, materiale, dimensione, ecc.					Codice	Modifiche
Materiale	Unificazione	Trattamento	Caratteristiche meccaniche	Massa kg	Unità di misura lineari: mm angoli:°sessagesimali		Codice grezzo	Formato disegno .....
Disegnato da P. Toppano	Controllato da P. Martini	Data 19.09.2013	Scala		Quote senza indicazione di tolleranza secondo tabella UNI EN 22768/1, con grado di precisione medio			Codice fornitore .....

essek
S.T. System Truck S.p.A.
via Paesa, 28 - I 46048 Roverbella (MN)
tel. +39 0376 696809 - info@stsystemtruck.com

TITOLO
FIGURINO IVECO STRALIS AS 260 YPS EURO 6
CONF. 1+3 - PASSO 4500 MM - TIPO: ST 2Y3C

N° DISEGNO	Modifica	Foglio
55.01.03.0033	3 - 22.04.2015	1/1

E24*13R11/18*0056*02

Disegno per omologazione
Drawing for type-approval

Varianti/variants	Versioni/versions	A	B
I??	??DB?????????????P?? ?	2835	1365
I??	??DB?????????????Q?? ?	2880	1320
I??	??DB?????????????R?? ?	2790	1410

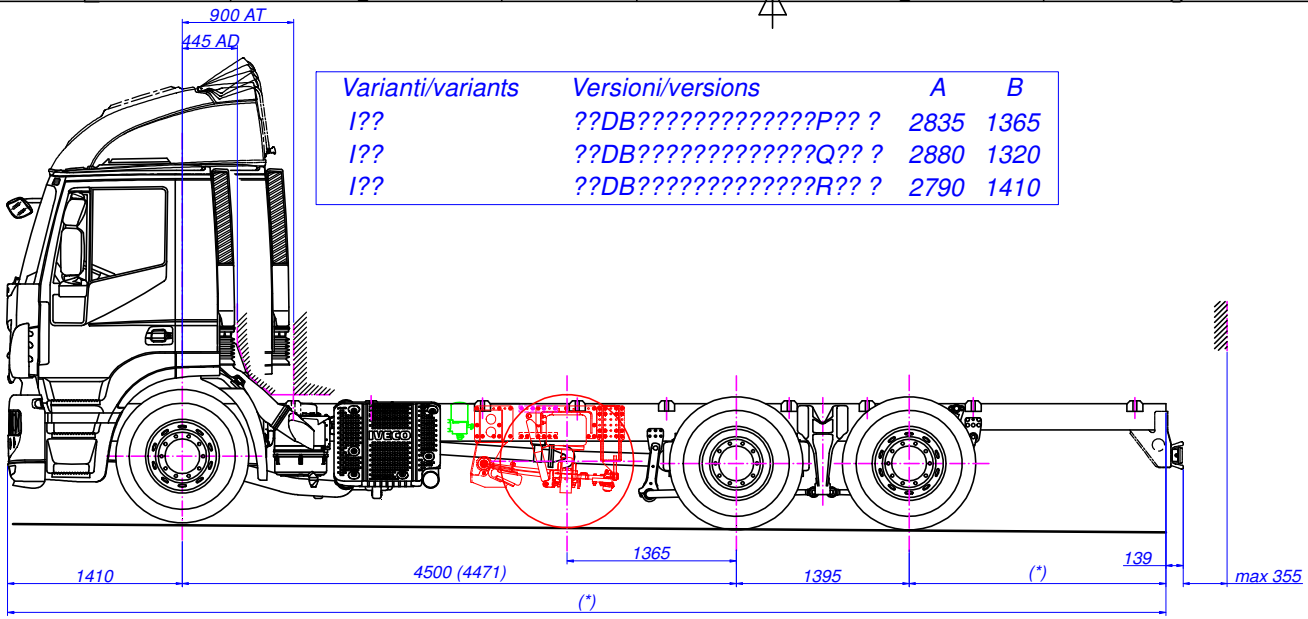

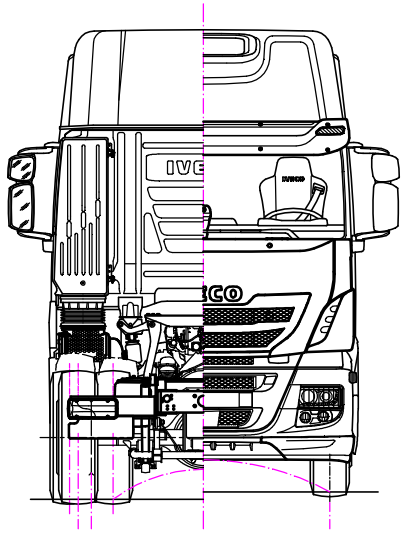

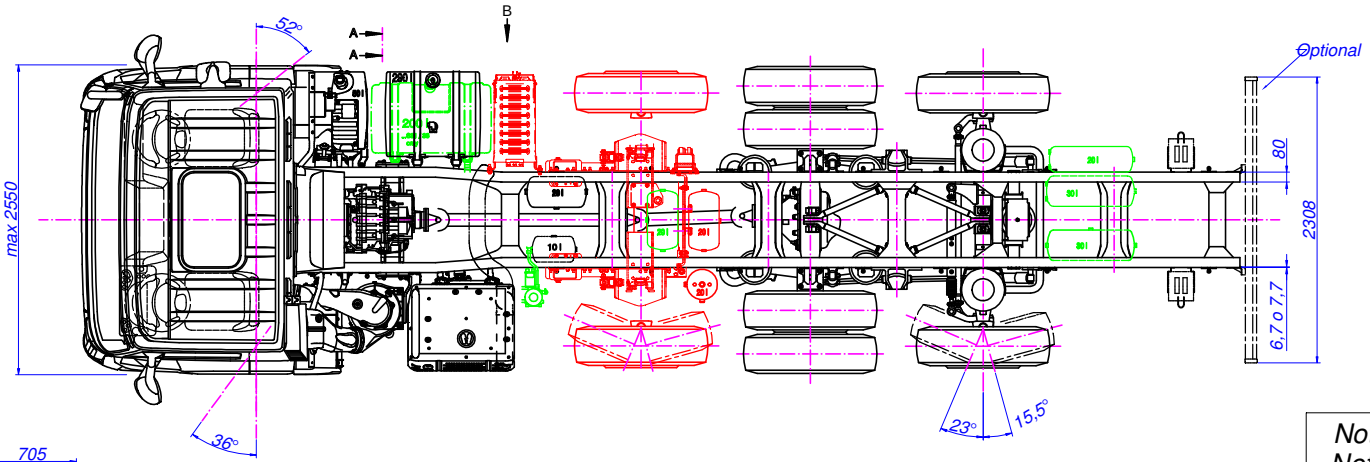

Nota (*): vedere scheda informativa
Note (*): see information document

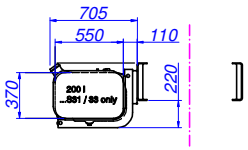

View A

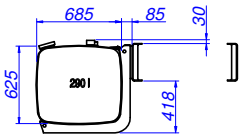

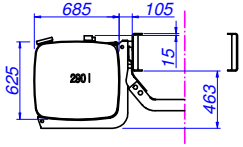

Vista B / View B

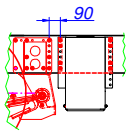

Rev. 3 del 22.04.2015 : aggiunti fazzoletti cod. 01200115 - PT
Rev. 2 del 12.01.2015 : aggiornato cartiglio - PT
Rev. 1 del 21.10.2014 : aggiunte versioni con interasse (2°+3° asse) in alternativa - PT

Pos.	Q.tà	Designazione, materiale, dimensione, ecc.					Codice	Modifiche
Materiale		Unificazione	Trattamento	Caratteristiche meccaniche	Massa kg	Unità di misura lineari: mm angoli:°sessagesimali	Codice grezzo	Formato disegno .....
Disegnato da P. Toppano		Controllato da P. Martini	Data 19.09.2013	Scala		Quote senza indicazione di tolleranza secondo tabella UNI EN 22768/1, con grado di precisione medio		Codice fornitore .....

essek
S.T. System Truck S.p.A.
via Paesa, 28 - I 46048 Roverbella (MN)
tel. +39 0376 696809 - info@stsystemtruck.com

TITOLO: FIGURINO IVECO STRALIS AD/AT 260 YPS EURO 6 CONF. 1+3 - PASSO 4500 MM

N° DISEGNO	Modifica	Foglio
55.01.03.0034	3 - 22.04.2015	1/1

E24*1/3R11/18*0056*02

Disegno per omologazione
Drawing for type-approval

Varianti/variants	Versioni/versions	A	B
I??	??EB?????????????P?? ?	3435	1365
I??	??EB?????????????Q?? ?	3480	1320
I??	??EB?????????????R?? ?	3390	1410

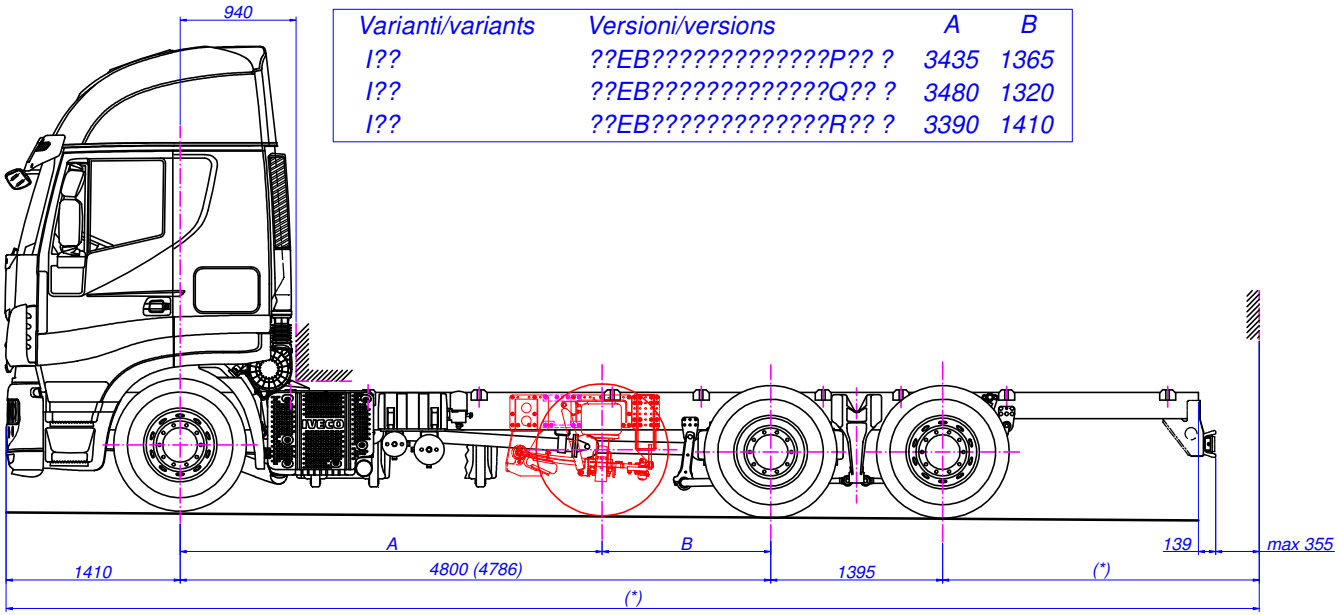

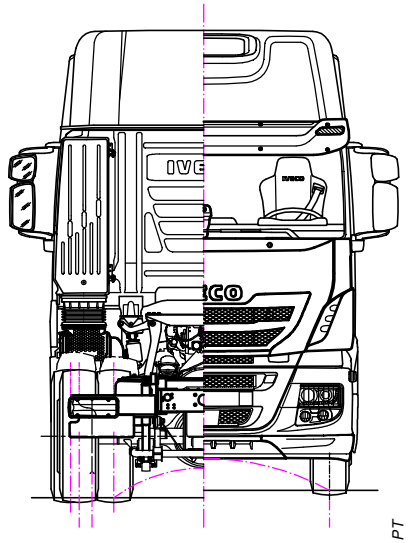

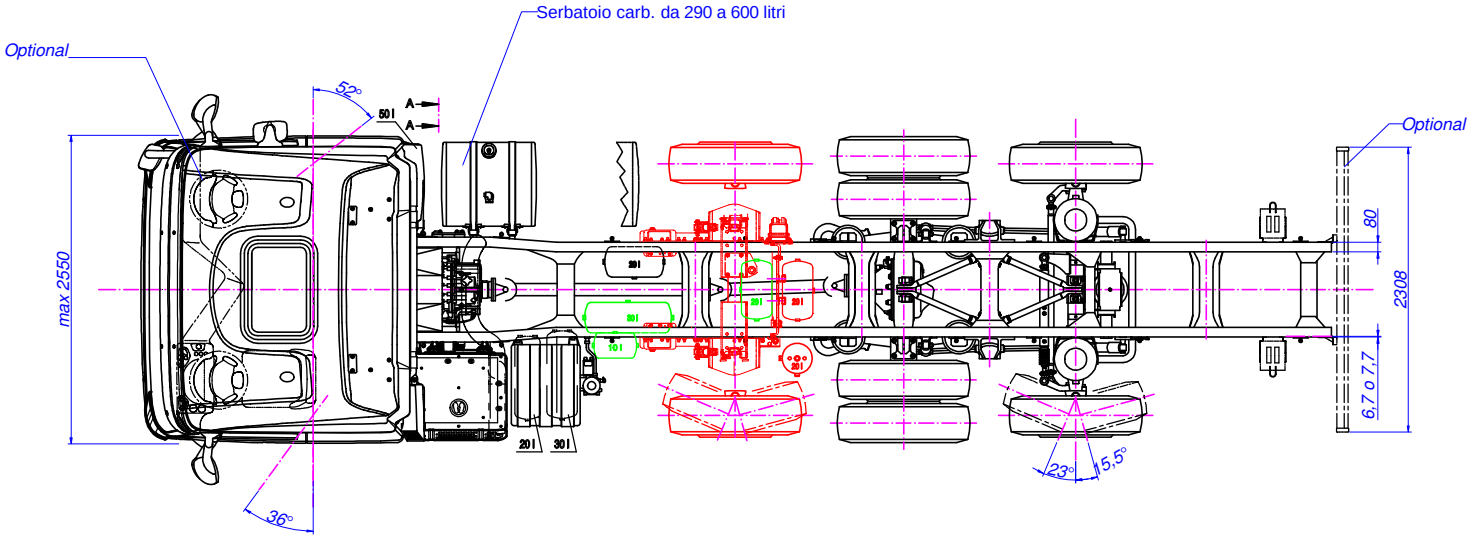

Nota (*): vedere scheda informativa
Note (*): see information document

Vista A / View A

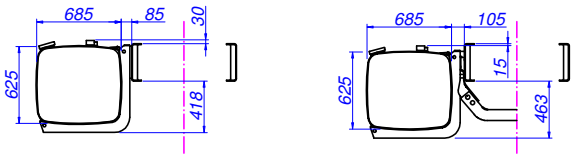

Rev. 2 del 12.01.2015 : aggiornato cartiglio - PT
Rev. 1 del 21.10.2014 : aggiunte versioni con interasse (2°-3° asse) di 1320 mm e 1410 mm - PT

Pos.	Q.tà	Designazione, materiale, dimensione, ecc.					Codice	Modifiche
Materiale		Unificazione	Trattamento	Caratteristiche meccaniche	Massa kg	Unità di misura lineari: mm angoli:°sessagesimali	Codice grezzo	Formato disegno .....
Disegnato da P. Toppano		Controllato da P. Martini	Data 19.09.2013	Scala		Quote senza indicazione di tolleranza secondo tabella UNI EN 22768/1, con grado di precisione medio		Codice fornitore .....

S.T. System Truck S.p.A.
via Paesa, 28 - I 46048 Roverbella (MN)
tel. +39 0376 696809 - info@stsystemtruck.com

TITOLO: FIGURINO IVECO STRALIS AS 260 YPS EURO 6
CONF. 1+3 - PASSO 4800 MM - TIPO: ST 2Y3C

N° DISEGNO	Modifica	Foglio
55.01.03.0035	2 - 12.01.2015	1/1

E24*13R11/18*0056*02

Disegno per omologazione
Drawing for type-approval

Varianti/variants	Versioni/versions	A	B
I??	??EB?????????????P?? ?	3435	1365
I??	??EB?????????????Q?? ?	3480	1320
I??	??EB?????????????R?? ?	3390	1410

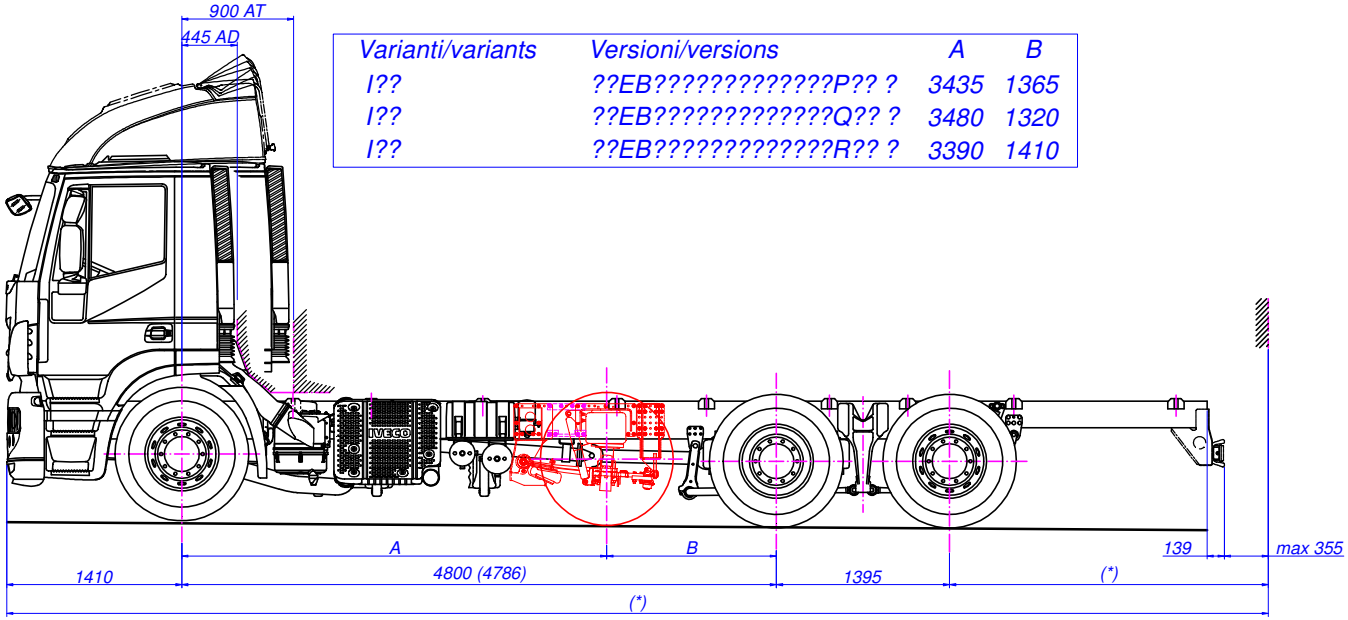

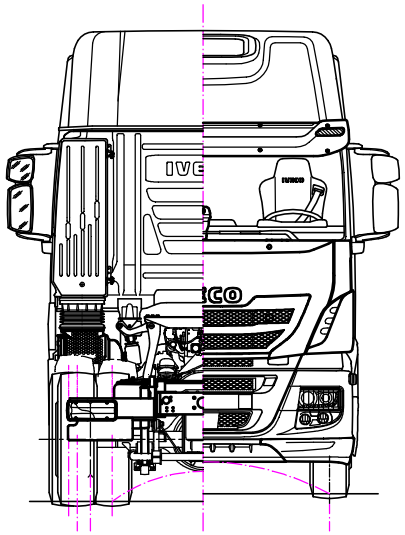

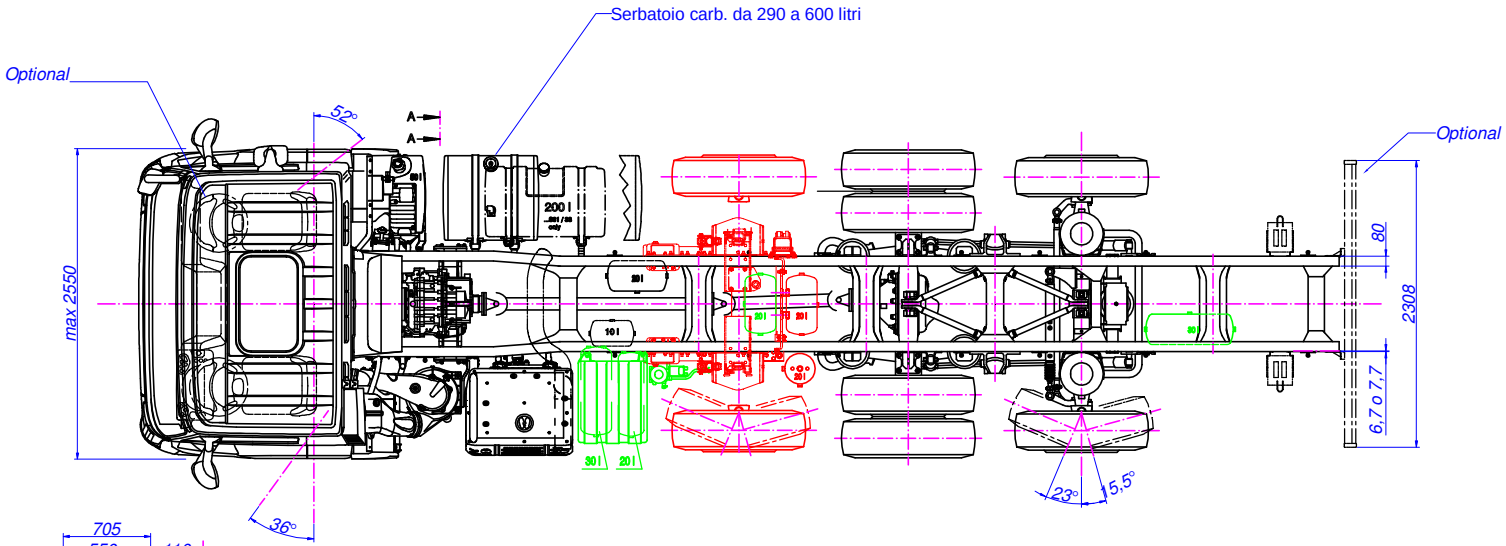

Nota (*): vedere scheda informativa
Note (*): see information document

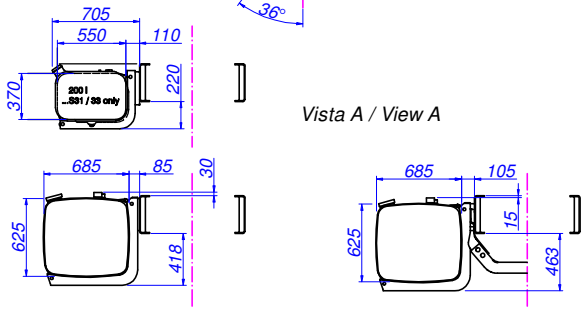

Vista A / View A

Rev. 2 del 12.01.2015 : aggiornato cartiglio - PT
Rev. 1 del 21.10.2014 : aggiunte versioni con interasse (2°+3° asse) di 1320 mm e 1410 mm - PT

Pos.	Q.tà	Designazione, materiale, dimensione, ecc.					Codice	Modifiche
Materiale		Unificazione	Trattamento	Caratteristiche meccaniche	Massa kg	Unità di misura lineari: mm angoli: °sessagesimali	Codice grezzo	Formato disegno .....
Disegnato da P. Toppano		Controllato da P. Martini	Data 19.09.2013	Scala		Quote senza indicazione di tolleranza secondo tabella UNI EN 22768/1, con grado di precisione medio		Codice fornitore .....

S.T. System Truck S.p.A.
via Paesa, 28 - I 46048 Roverbella (MN)
tel. +39 0376 696809 - info@stsystemtruck.com

TITOLO
FIGURINO IVECO STRALIS AD/AT 260 YPS EURO 6
CONF. 1+3 - PASSO 4800 MM - TIPO: ST 2Y3C

N° DISEGNO	Modifica	Foglio
55.01.03.0036	2 - 12.01.2015	1/1

E24*13R11/18*0056*02

Disegno per omologazione
Drawing for type-approval

Varianti/variants	Versioni/versions	A	B
I??	??FB?????????????P?? ?	3735	1365
I??	??FB?????????????Q?? ?	3780	1320
I??	??FB?????????????R?? ?	3690	1410

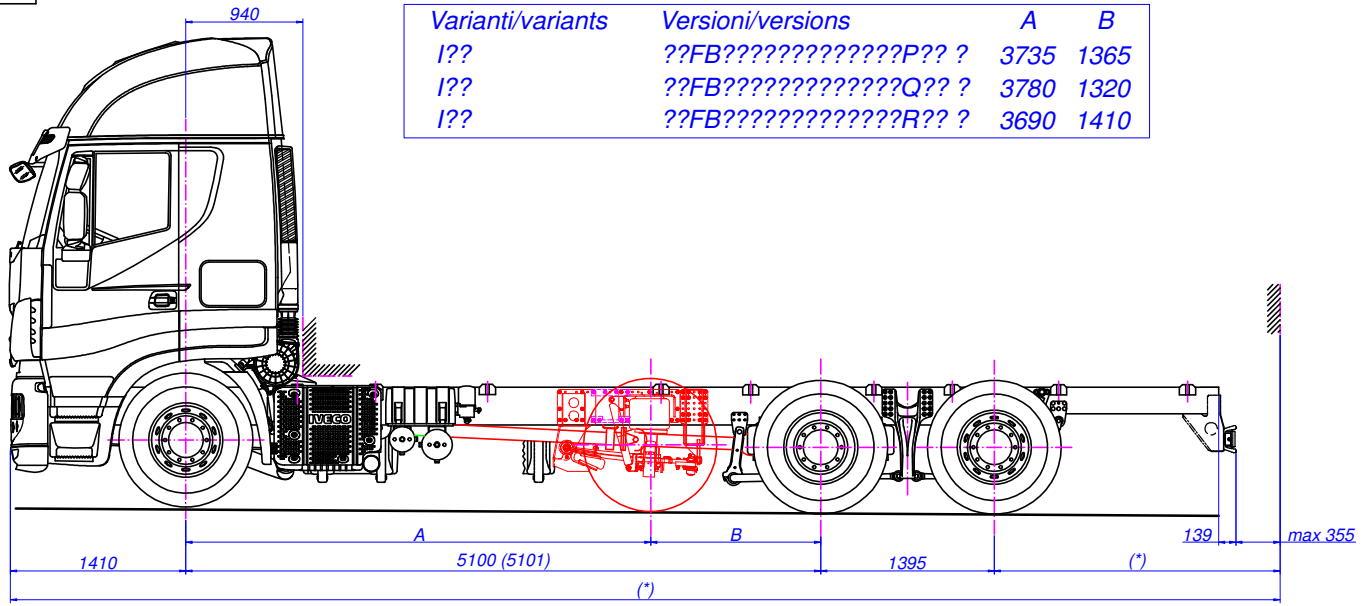

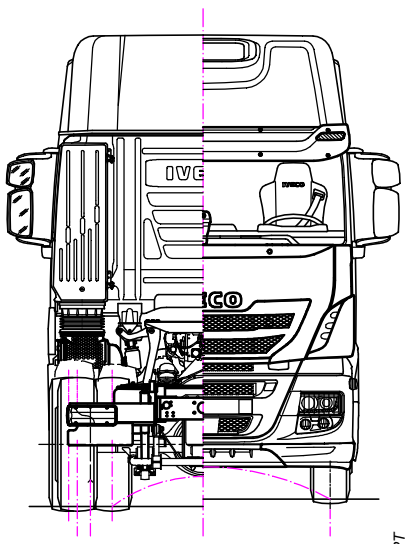

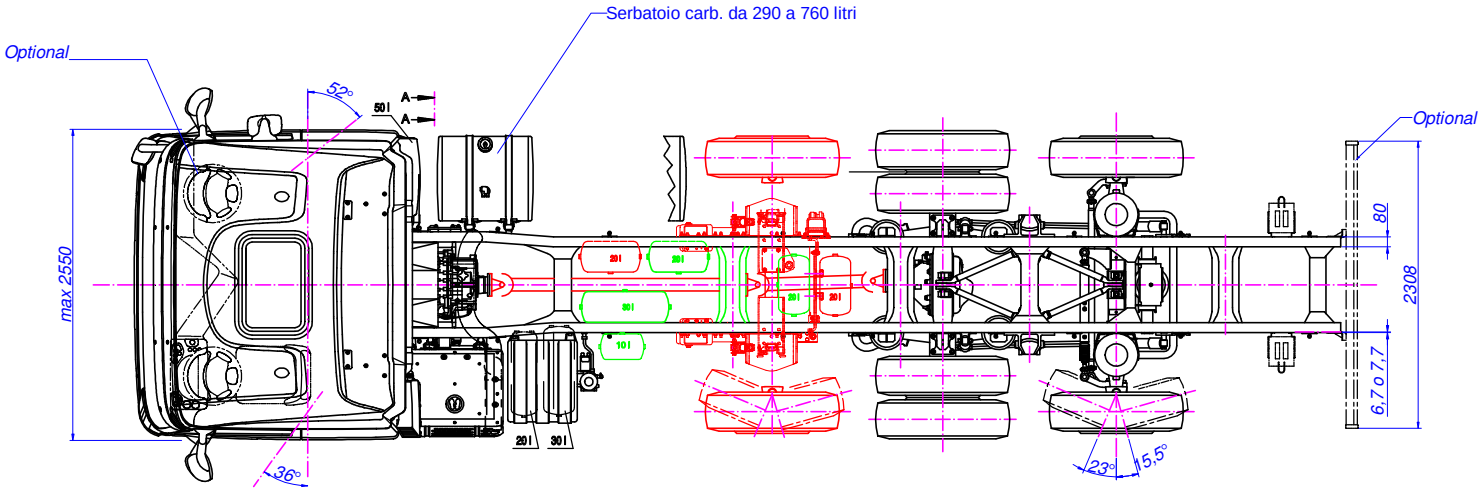

Nota (*): vedere scheda informativa
Note (*): see information document

Vista A / View A

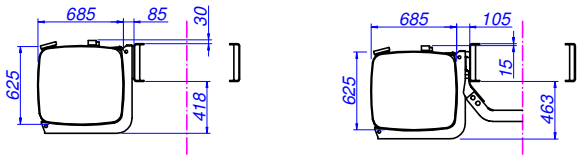

Rev. 2 del 12.01.2015 : aggiornato cartiglio - PT
Rev. 1 del 21.10.2014 : aggiunte versioni con interasse (2°÷3° asse) di 1320 mm e 1410 mm - PT

Pos.	Q.tà	Designazione, materiale, dimensione, ecc.					Codice	Modifiche
Materiale		Unificazione	Trattamento	Caratteristiche meccaniche	Massa kg	Unità di misura lineari: mm angoli:°sessagesimali	Codice grezzo	Formato disegno .....
Disegnato da P. Toppano		Controllato da P. Martini	Data 19.09.2013	Scala	Quote senza indicazione di tolleranza secondo tabella UNI EN 22768/1, con grado di precisione medio		Codice fornitore	

S.T. System Truck S.p.A.
via Paesa, 28 - I 46048 Roverbella (MN)
tel. +39 0376 696809 - info@stsystemtruck.com

TITOLO
FIGURINO IVECO STRALIS AS 260 YPS EURO 6
CONF. 1+3 - PASSO 5100 MM - TIPO: ST 2Y3C

N° DISEGNO 55.01.03.0037 | Modifica 2 - 12.01.2015 | Foglio 1/1

E24*13R11/18*0056*02

Disegno per omologazione
Drawing for type-approval

Varianti/variants	Versioni/versions	A	B
I??	??FB?????????????P?? ?	3735	1365
I??	??FB?????????????Q?? ?	3780	1320
I??	??FB?????????????R?? ?	3690	1410

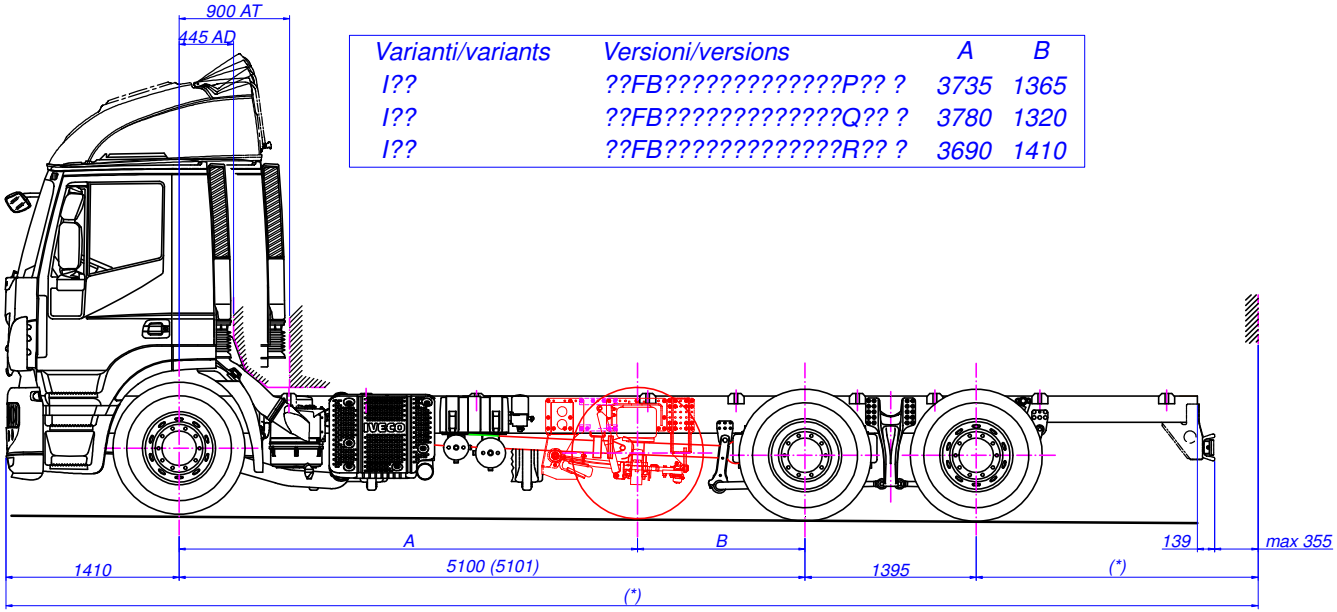

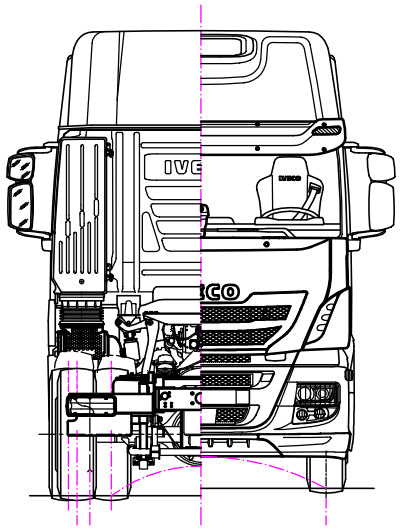

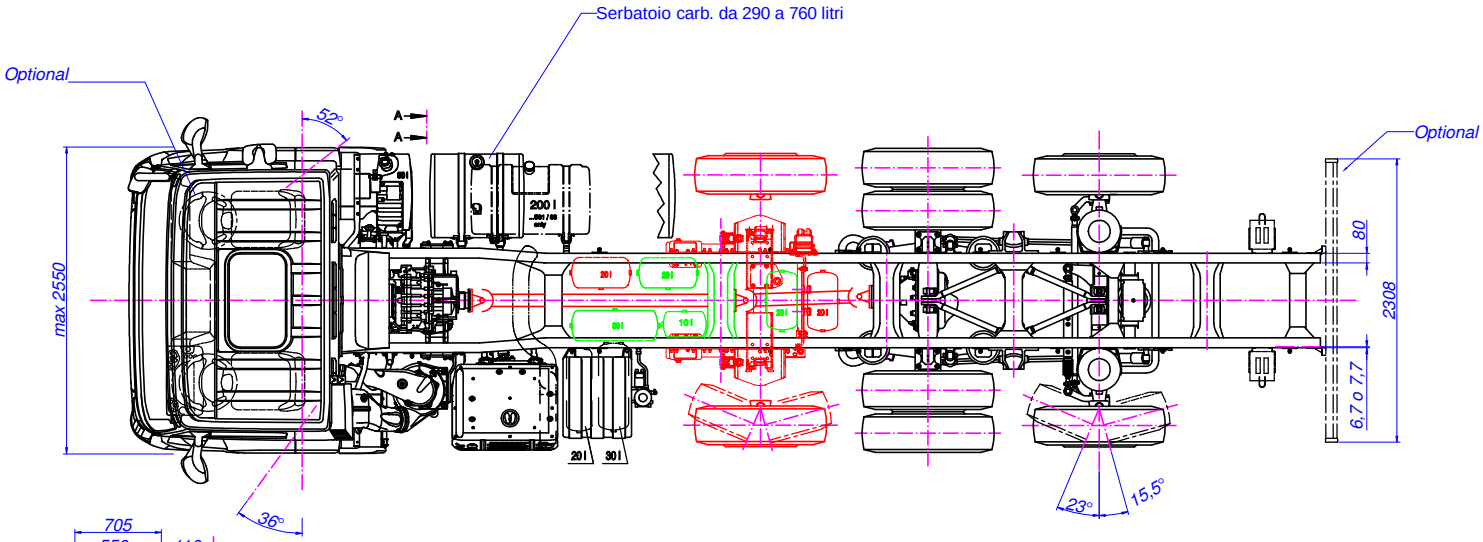

Nota (*): vedere scheda informativa
Note (*): see information document

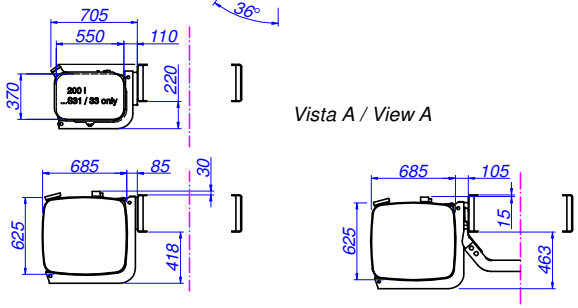

Vista A / View A

Rev. 2 del 12.01.2015 : aggiornato cartiglio - PT
Rev. 1 del 21.10.2014 : aggiunte versioni con interasse (2°÷3° asse) di 1320 mm e 1410 mm - PT

Pos.	Q.tà	Designazione, materiale, dimensione, ecc.					Codice	Modifiche
Materiale		Unificazione	Trattamento	Caratteristiche meccaniche	Massa kg	Unità di misura lineari: mm angoli:°sessagesimali	Codice grezzo	Formato disegno .....
Disegnato da P. Toppano		Controllato da P. Martini	Data 19.09.2013	Scala		Quote senza indicazione di tolleranza secondo tabella UNI EN 22768/1, con grado di precisione medio		Codice fornitore .....

S.T. System Truck S.p.A.
via Paesa, 28 - I 46048 Roverbella (MN)
tel. +39 0376 696809 - info@stsystemtruck.com

TITOLO
FIGURINO IVECO STRALIS AD/AT 260 YPS EURO 6
CONF. 1+3 - PASSO 5100 MM - TIPO: ST 2Y3C

N° DISEGNO	Modifica	Foglio
55.01.03.0038	2 - 12.01.2015	1/1

E24*13R11/18*0056*02

Disegno per omologazione
Drawing for type-approval

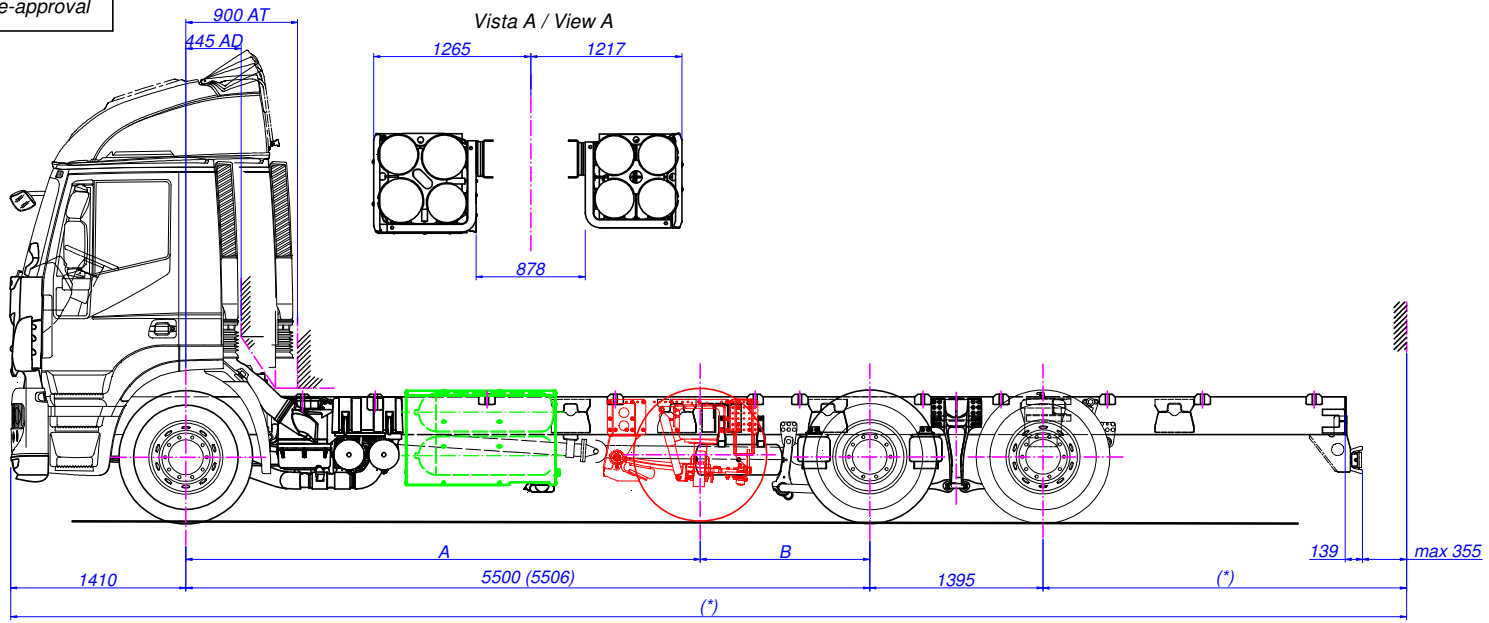

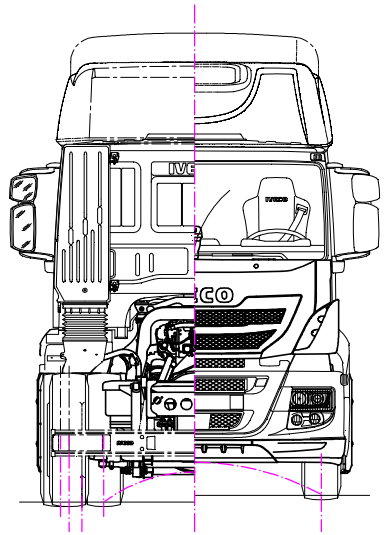

Nota (*): vedere scheda informativa
Note (*): see information document

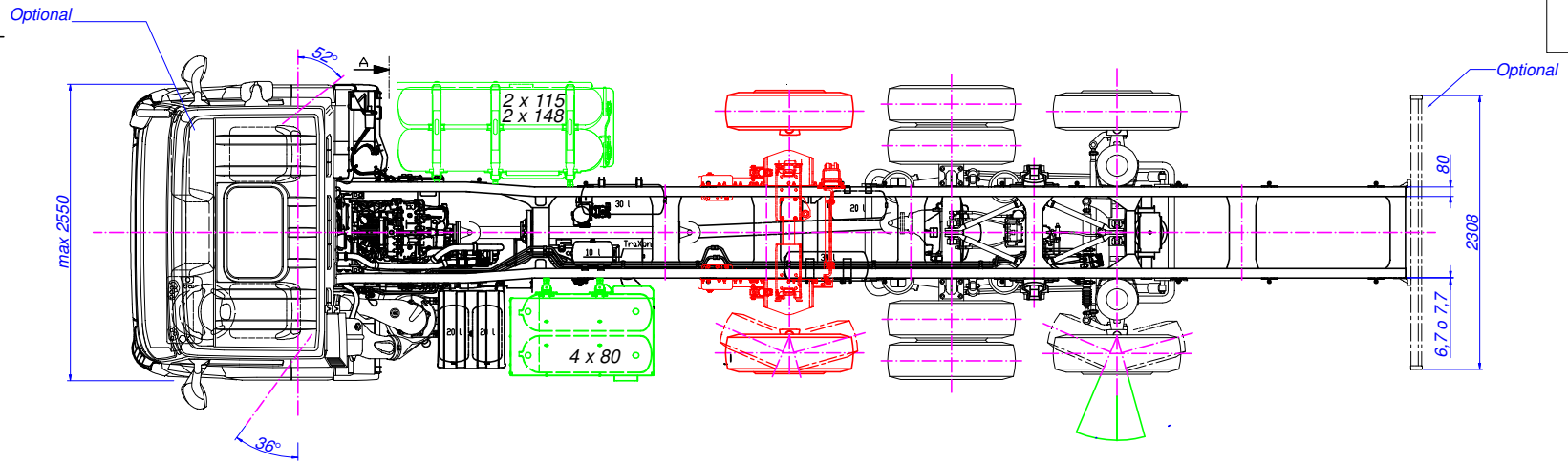

Varianti/variants	Versioni/versions	A	B
ICC	G3LB?????????????P?? ?	4135	1365
ICC	G3LB?????????????Q?? ?	4180	1320
ICC	G3LB?????????????R?? ?	4090	1410

Pos.	Q.tà	Designazione, materiale, dimensione, ecc.					Codice	Modifiche
Materiale		Unificazione	Trattamento	Caratteristiche meccaniche	Massa kg	Unità di misura lineari: mm angoli:°sessagesimali	Codice grezzo	Formato disegno .....
Disegnato da P. Toppano		Controllato da P. Martini	Data 19.07.2018	Scala		Quote senza indicazione di tolleranza secondo tabella UNI EN 22768/1, con grado di precisione medio		Codice fornitore .....

S.T. System Truck S.p.A.
via Paesa, 28 - I 46048 Roverbella (MN)
tel. +39 0376 696809 - info@stsystemtruck.com

TITOLO: FIGURINO IVECO STRALIS AD/AT 260 YPS EURO 6 CNG CURSOR 9 CONF. 1+3 - PASSO 5500 MM - TIPO: ST 2Y3C

N° DISEGNO: 55.01.03.0126 | Modifica: --- | Foglio: 1/1

E24*13R11/18*0056*02

Disegno per omologazione
Drawing for type-approval

Varianti/variants	Versioni/versions	A	B
I??	??GB?????????????P?? ?	4335	1365
I??	??GB?????????????Q?? ?	4380	1320
I??	??GB?????????????R?? ?	4290	1410

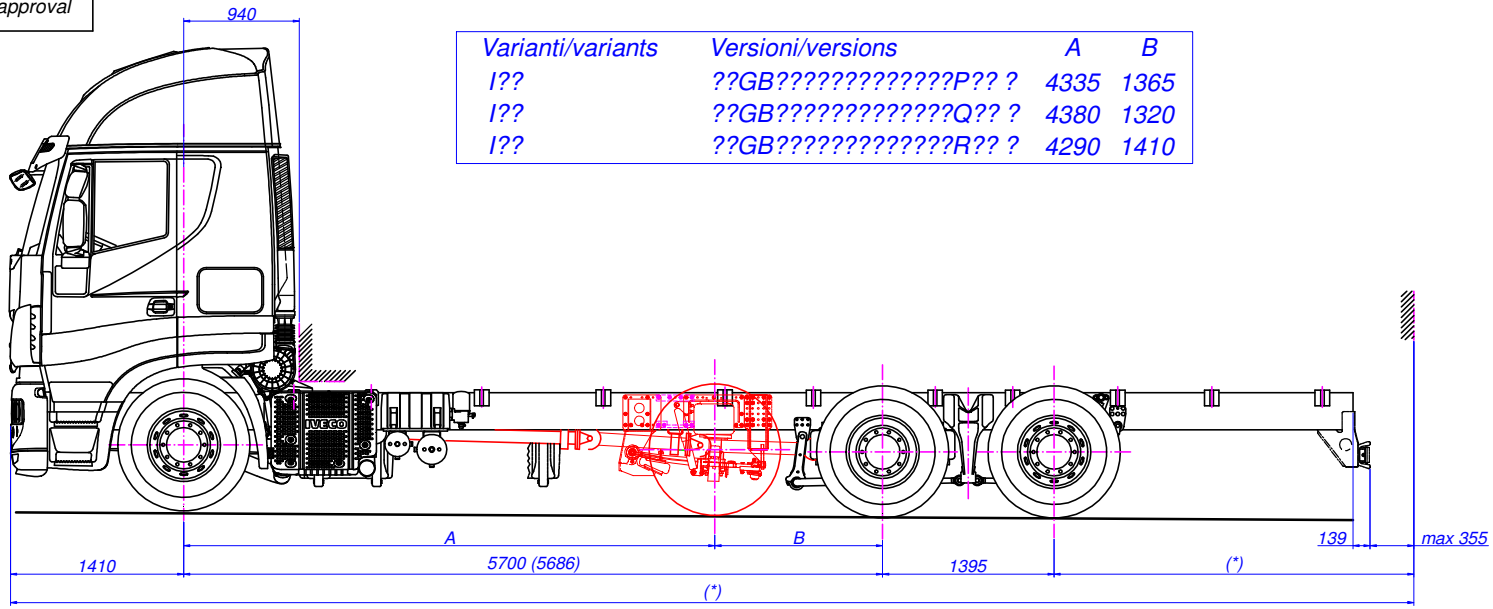

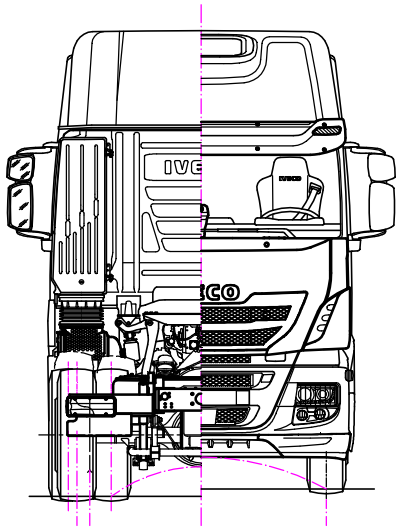

Nota (*): vedere scheda informativa
Note (*): see information document

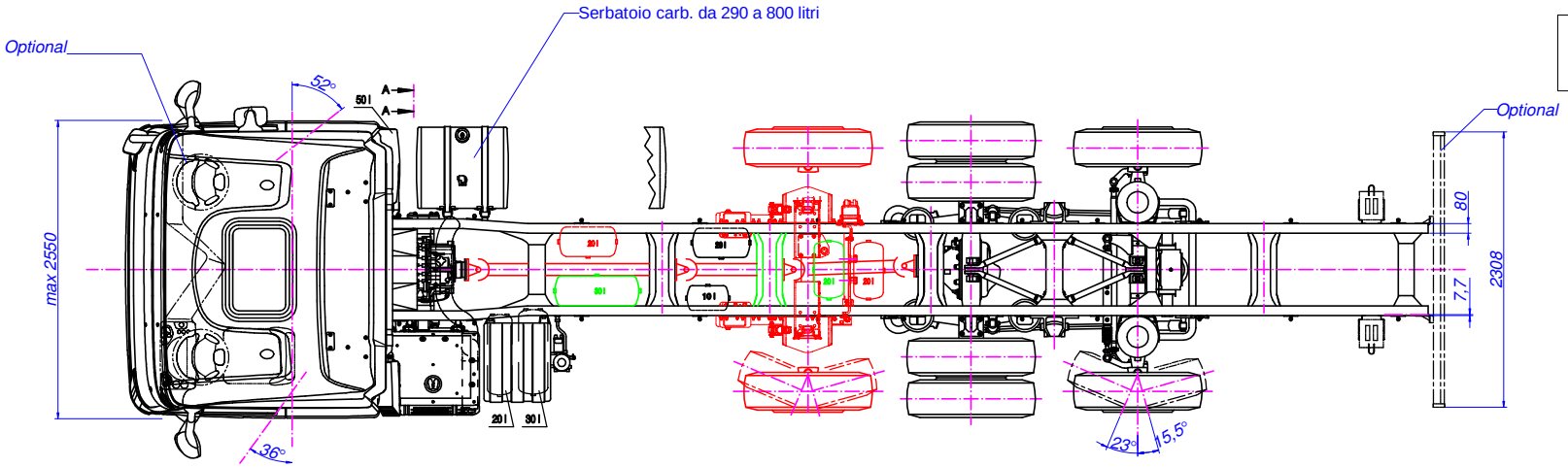

Vista A / View A

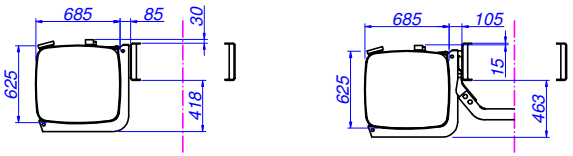

Rev. 2 del 12.01.2015 : aggiornato cartiglio - PT
Rev. 1 del 21.10.2014 : aggiunte versioni con interasse (2°+3° asse) di 1320 mm e 1410 mm - PT

Pos.	Q.tà	Designazione, materiale, dimensione, ecc.					Codice	Modifiche
Materiale		Unificazione	Trattamento	Caratteristiche meccaniche	Massa kg	Unità di misura lineari: mm angoli:°sessagesimali	Codice grezzo	Formato disegno .....
Disegnato da P. Toppano		Controllato da P. Martini	Data 19.09.2013	Scala	Quote senza indicazione di tolleranza secondo tabella UNI EN 22768/1, con grado di precisione medio			Codice fornitore .....

S.T. System Truck S.p.A.
via Paesa, 28 - I 46048 Roverbella (MN)
tel. +39 0376 696809 - info@stsystemtruck.com

TITOLO FIGURINO IVECO STRALIS AS 260 YPS EURO 6
CONF. 1+3 - PASSO 5700 MM - TIPO: ST 2Y3C

N° DISEGNO 55.01.03.0039 | Modifica 2 - 12.01.2015 | Foglio 1/1

E24*13R11/18*0056*02

Disegno per omologazione
Drawing for type-approval

Varianti/variants	Versioni/versions	A	B
I??	??GB?????????????P?? ?	4335	1365
I??	??GB?????????????Q?? ?	4380	1320
I??	??GB?????????????R?? ?	4290	1410

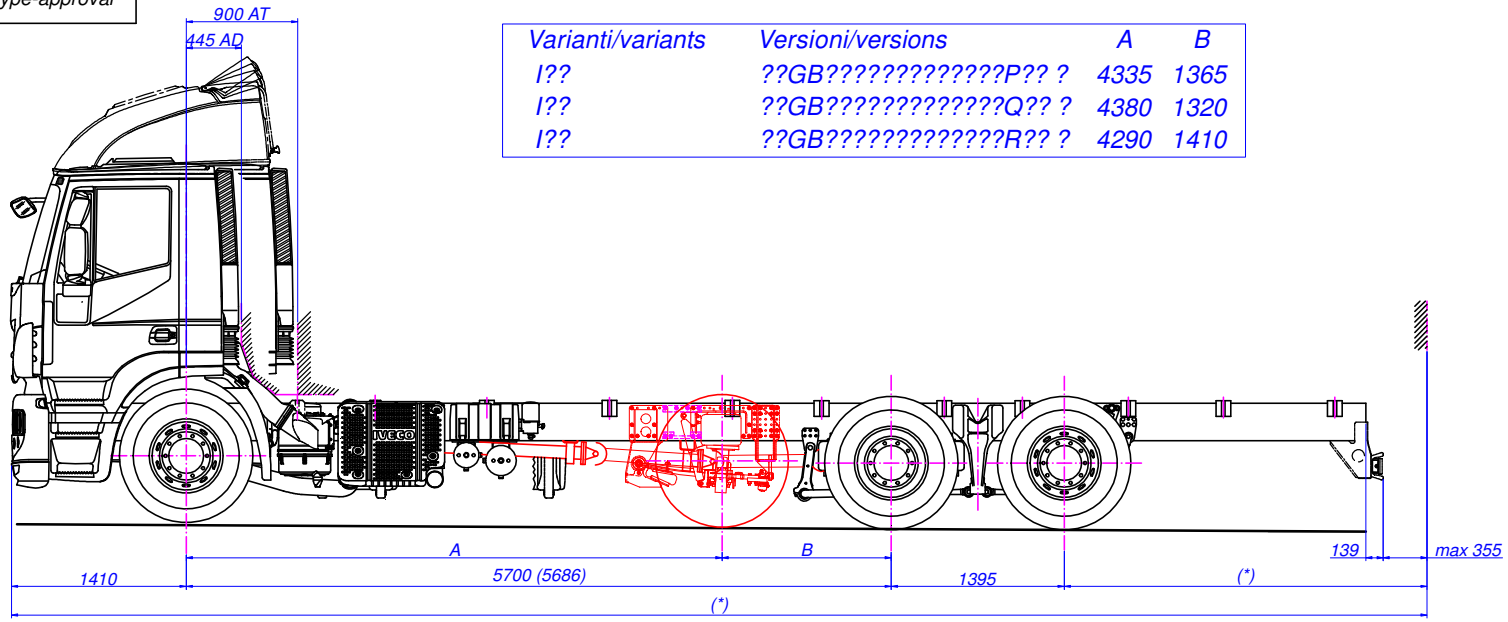

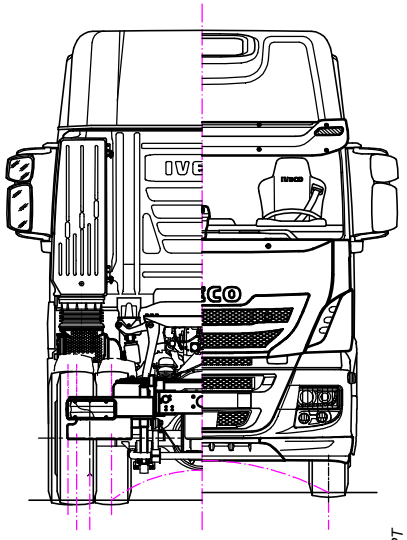

Nota (*): vedere scheda informativa
Note (*): see information document

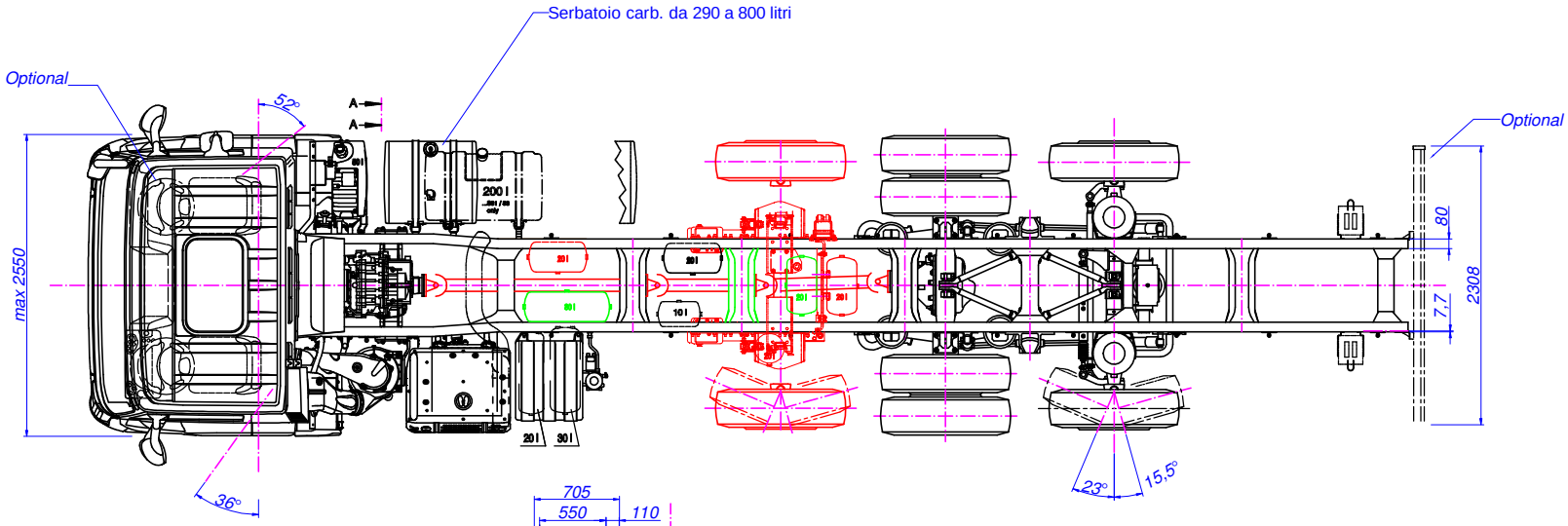

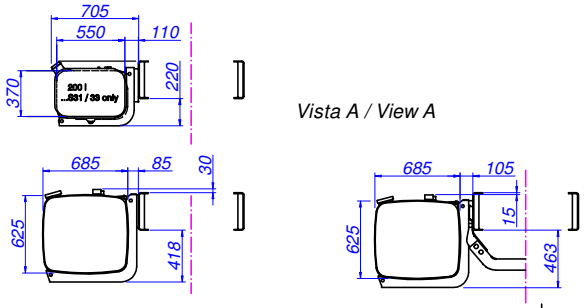

Vista A / View A

Rev. 2 del 12.01.2015 : aggiornato cartiglio - PT
Rev. 1 del 21.10.2014 : aggiunte versioni con interasse (2°÷3° asse) di 1320 mm e 1410 mm - PT

Pos.	Q.tà	Designazione, materiale, dimensione, ecc.					Codice	Modifiche
Materiale		Unificazione	Trattamento	Caratteristiche meccaniche	Massa kg	Unità di misura lineari: mm angoli: °sessagesimali	Codice grezzo	Formato disegno .....
Disegnato da P. Toppano		Controllato da P. Martini	Data 19.09.2013	Scala	Quote senza indicazione di tolleranza secondo tabella UNI EN 22768/1, con grado di precisione medio			Codice fornitore .....

S.T. System Truck S.p.A.
via Paesa, 28 - I 46048 Roverbella (MN)
tel. +39 0376 696809 - info@stsystemtruck.com

TITOLO
FIGURINO IVECO STRALIS AD/AT 260 YPS EURO 6
CONF. 1+3 - PASSO 5700 MM - TIPO: ST 2Y3C

N° DISEGNO	Modifica	Foglio
55.01.03.0040	2 - 12.01.2015	1/1

E24*13R11/18*0056*02

Disegno per omologazione
Drawing for type-approval

Varianti/variants	Versioni/versions	A	B
I??	??HB?????????????P?? ?	4685	1365
I??	??HB?????????????Q?? ?	4730	1320
I??	??HB?????????????R?? ?	4640	1410

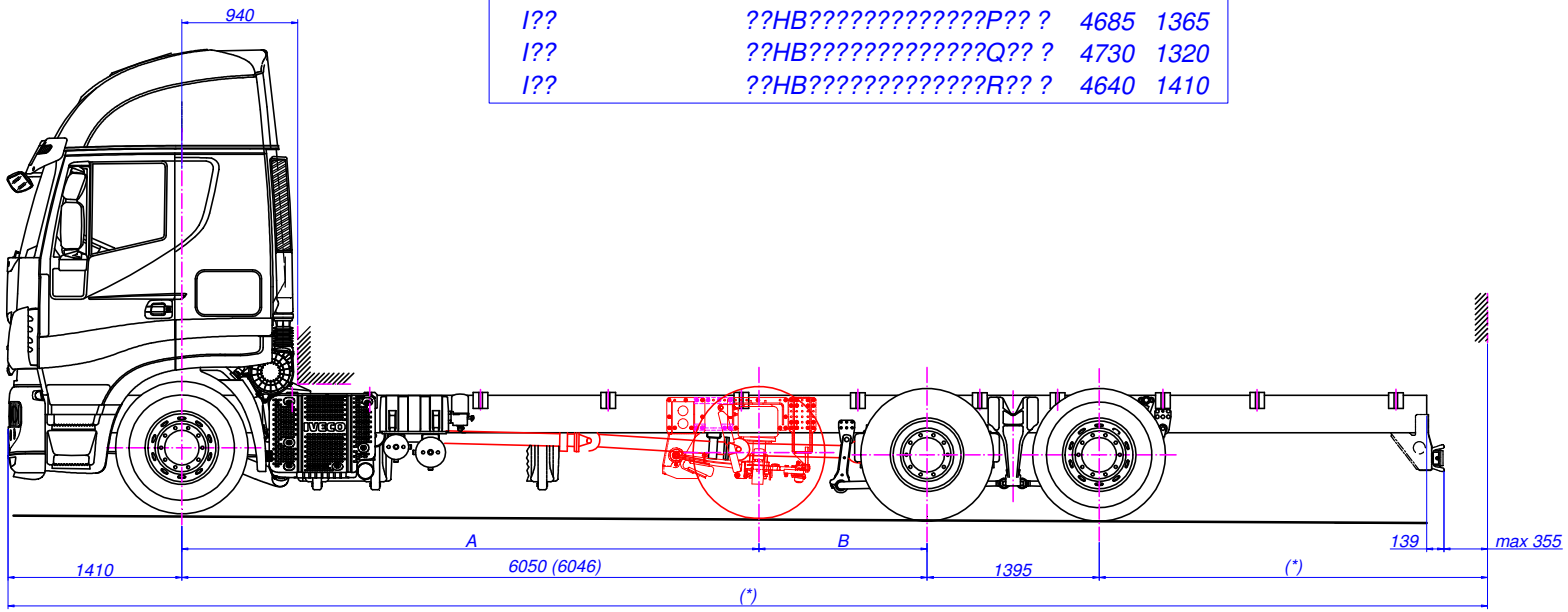

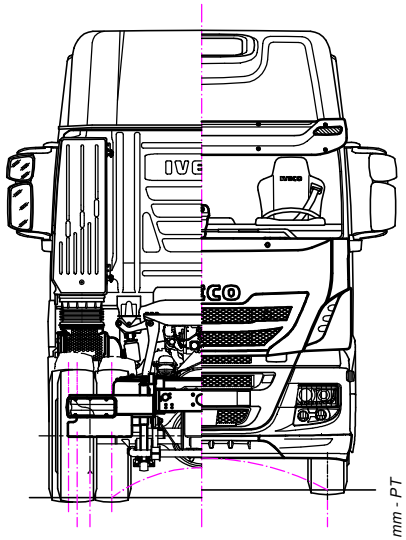

Nota (*): vedere scheda informativa
Note (*): see information document

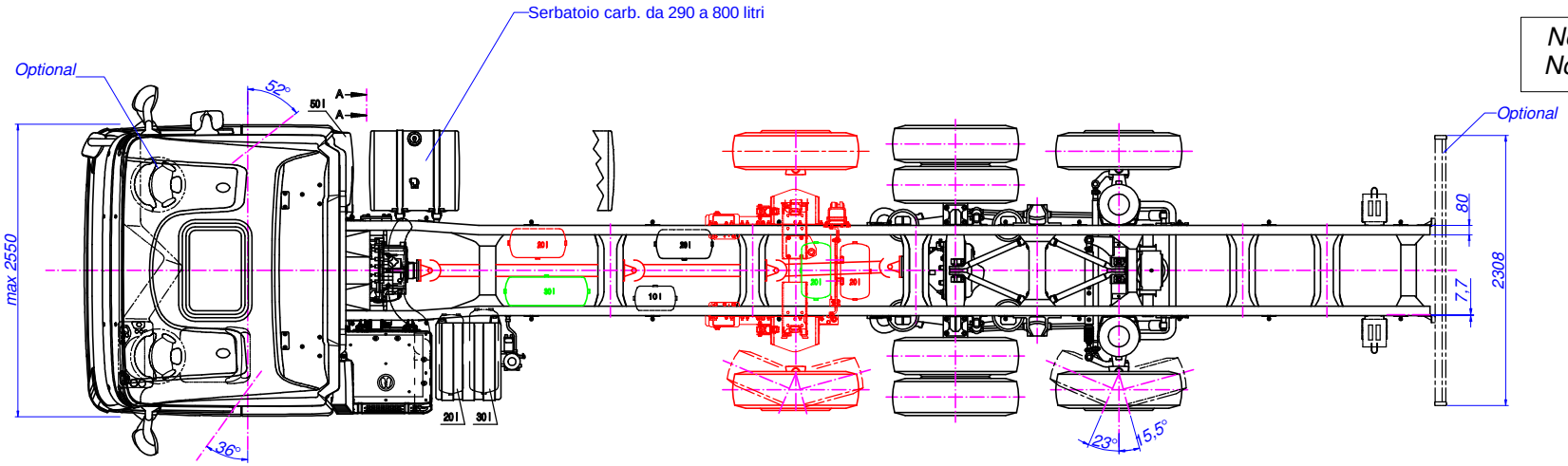

Vista A / View A

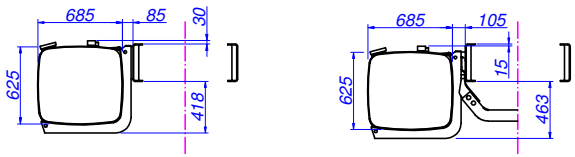

Rev. 2 del 12.01.2015 : aggiornato cartiglio - PT
Rev. 1 del 21.10.2014 : aggiunte versioni con interasse (2°-3° asse) di 1320 mm e 1410 mm - PT

Pos.	Q.tà	Designazione, materiale, dimensione, ecc.					Codice	Modifiche
Materiale		Unificazione	Trattamento	Caratteristiche meccaniche	Massa kg	Unità di misura lineari: mm angoli:°sessagesimali	Codice grezzo	Formato disegno .....
Disegnato da P. Toppano		Controllato da P. Martini	Data 19.09.2013	Scala	Quote senza indicazione di tolleranza secondo tabella UNI EN 22768/1, con grado di precisione medio			Codice fornitore .....

essedi
S.T. System Truck S.p.A.
via Paesa, 28 - I 46048 Roverbella (MN)
tel. +39 0376 696809 - info@stsystemtruck.com

TITOLO
FIGURINO IVECO STRALIS AS 260 YPS EURO 6
CONF. 1+3 - PASSO 6050 MM - TIPO: ST 2Y3C

N° DISEGNO	Modifica	Foglio
55.01.03.0041	2 - 12.01.2015	1/1

E24*1/3R11/18*0056*02

Disegno per omologazione
Drawing for type-approval

Varianti/variants	Versioni/versions	A	B
I??	??HB?????????????P?? ?	4685	1365
I??	??HB?????????????Q?? ?	4730	1320
I??	??HB?????????????R?? ?	4640	1410

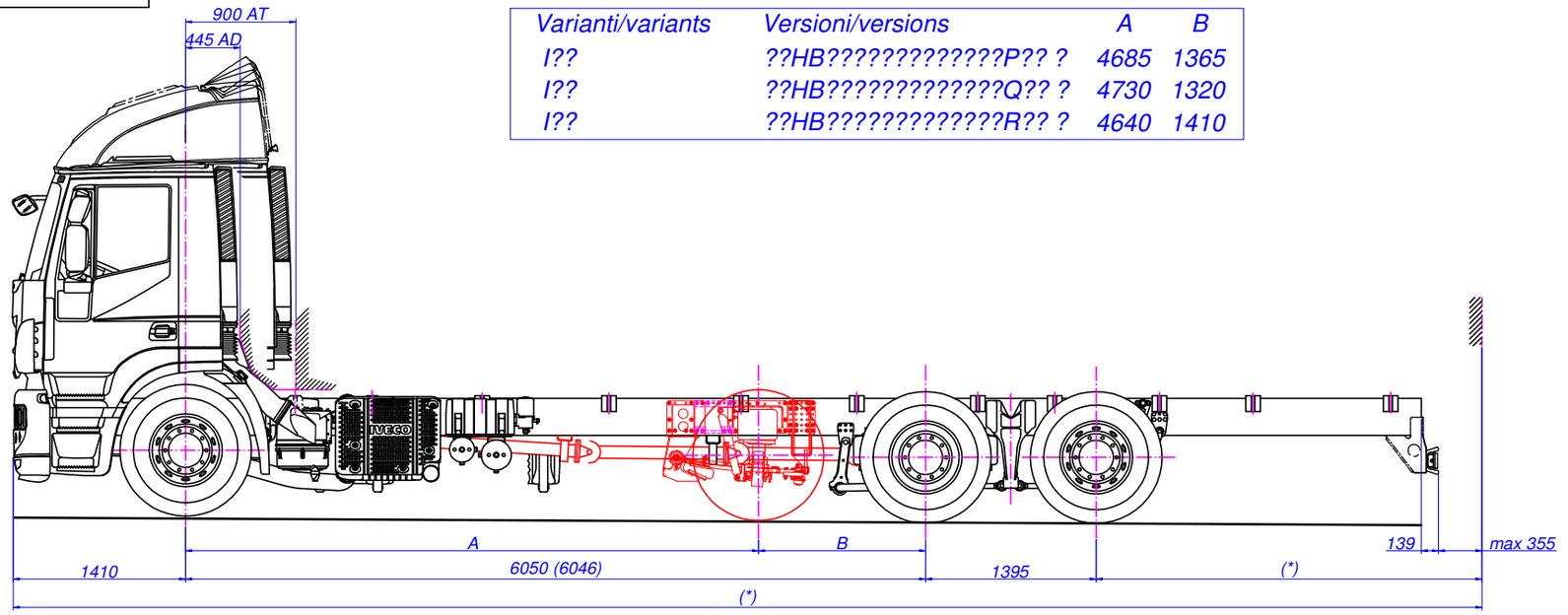

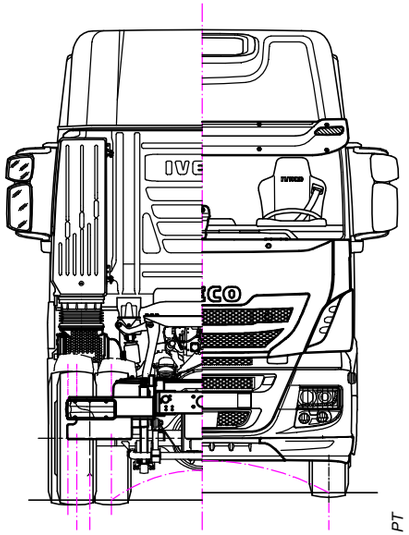

Nota (*): vedere scheda informativa
Note (*): see information document

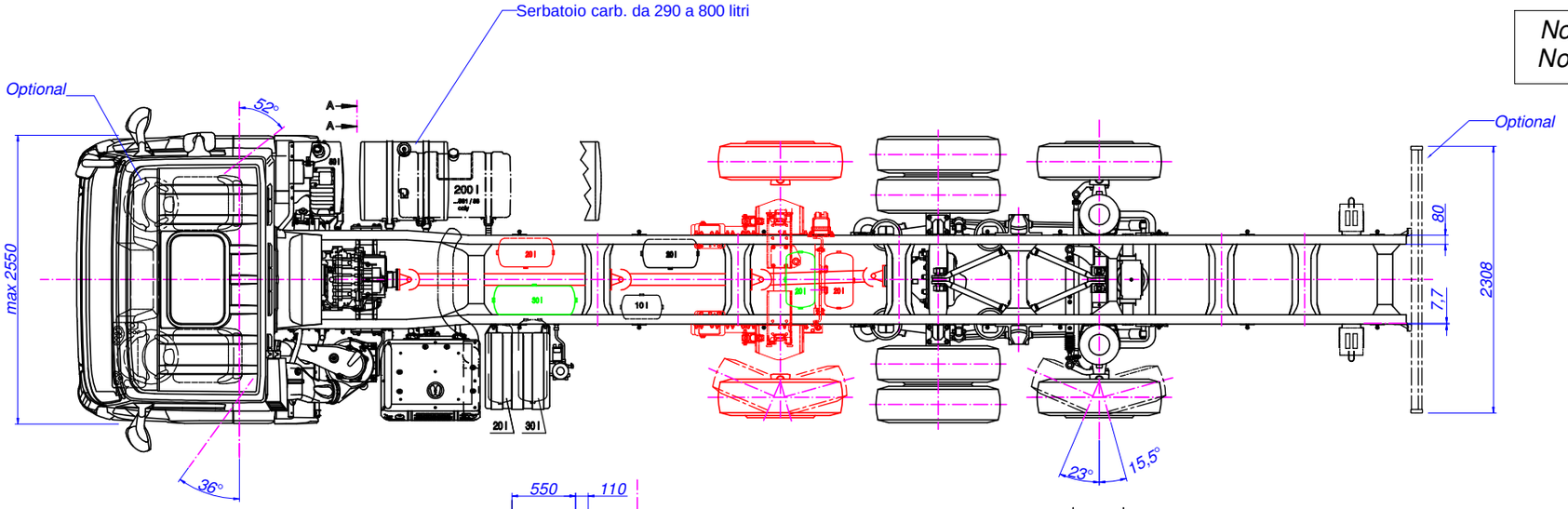

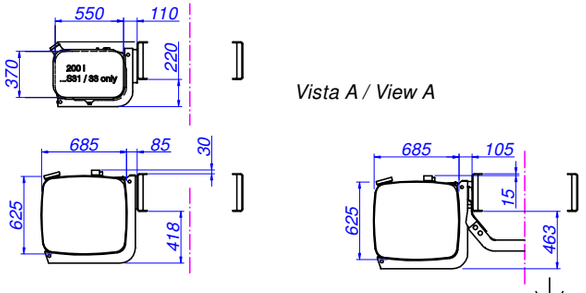

Vista A / View A

Pos.	Q.tà	Designazione, materiale, dimensione, ecc.					Codice	Modifiche
Materiale		Unificazione	Trattamento	Caratteristiche meccaniche	Massa kg	Unità di misura lineari: mm angoli:°sessagesimali	Codice grezzo	Formato disegno .....
Disegnato da P. Toppano		Controllato da P. Martini	Data 19.09.2013	Scala		Quote senza indicazione di tolleranza secondo tabella UNI EN 22768/1, con grado di precisione medio		Codice fornitore .....

S.T. System Truck S.p.A.
via Paesa, 28 - I 46048 Roverbella (MN)
tel. +39 0376 696809 - info@stsystemtruck.com

TITOLO: FIGURINO IVECO STRALIS AD/AT 260 YPS EURO 6
CONF. 1+3 - PASSO 6050 MM - TIPO: ST 2Y3C

N° DISEGNO: 55.01.03.0042 | Modifica: 2 - 12.01.2015 | Foglio: 1/1

Rev. 2 del 12.01.2015 : aggiornato cartiglio - PT
Rev. 1 del 21.10.2014 : aggiunte versioni con interasse (2°+3° asse) di 1320 mm e 1410 mm - PT

E24*13R11/18*0056*02

Disegno per omologazione
Drawing for type-approval

Varianti/variants	Versioni/versions	A	B
B??	??CB?????????????P?? ?	2835	1365
B??	??CB?????????????Q?? ?	2880	1320
B??	??CB?????????????R?? ?	2790	1410

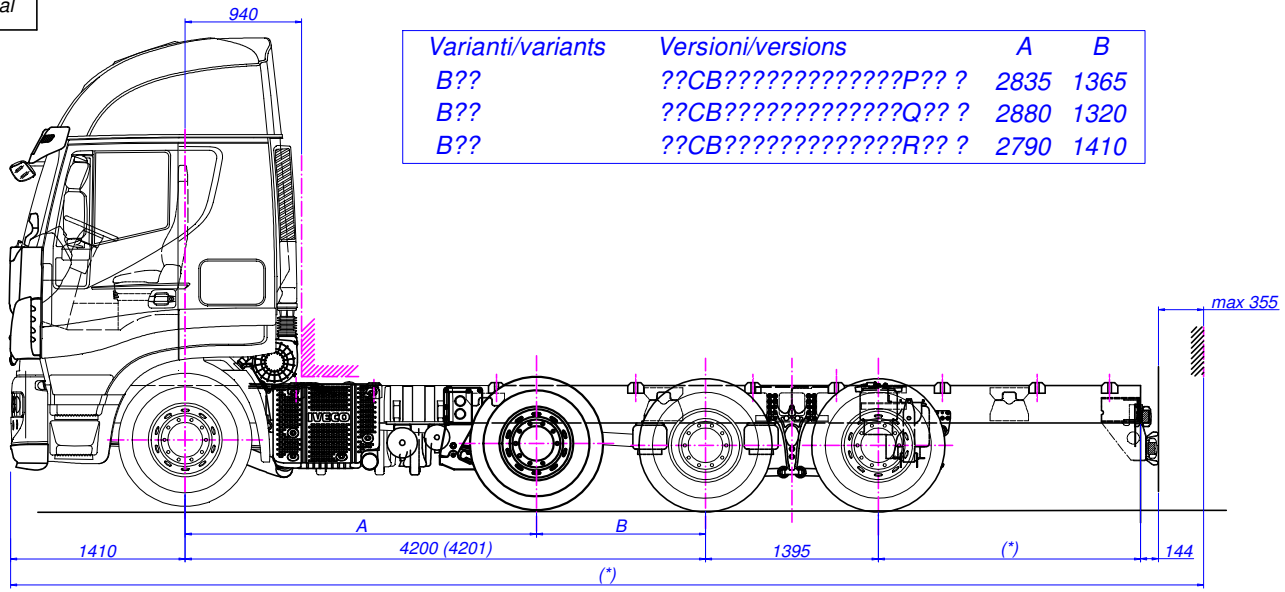

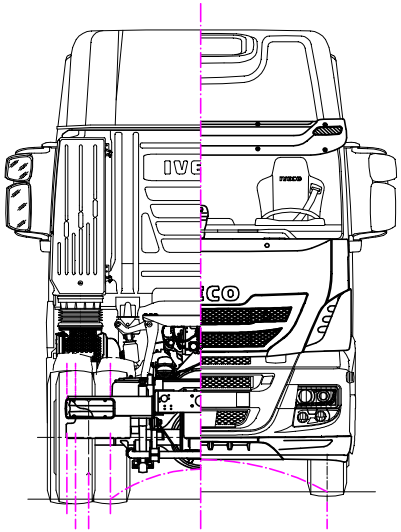

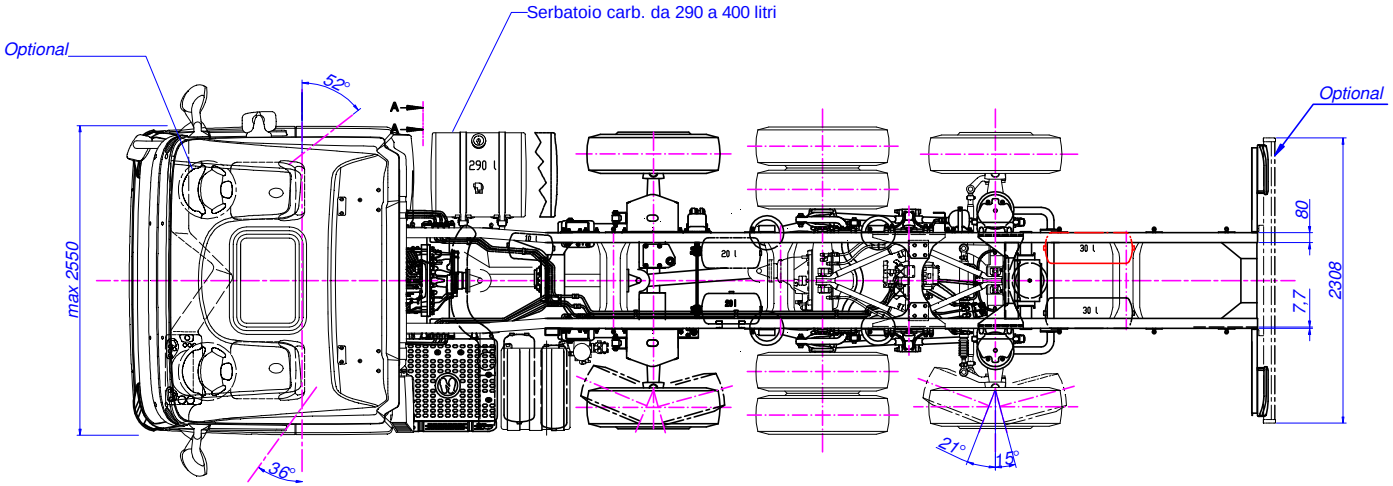

Nota (*): vedere scheda informativa
Note (*): see information document

Vista A / View A

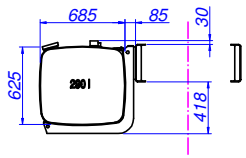

model 6x2 P	Fdp	engine
AS260X42,46,48Y/PS HR/SR DN	C46Y	C11
AS260X51,57Y/PS HR/SR DN	C56Y	C13

Disegnato da	Controllato da	Data	Scala
P. M.	.....	16.05.2018	.....

Quote senza indicazione di tolleranza secondo tabella UNI EN 22768/1, con grado di precisione

Modifiche

Formato disegno .....

S.T. System Truck S.p.A.
via Paesa, 28 - I 46048 Roverbella (MN)
tel. +39 0376 696809 - info@stsystemtruck.com

TITOLO FIGURINO IVECO STRALIS X-WAY AS 260 YPS EURO 6 CONF. 1+3 - PASSO 4200 MM

N° DISEGNO 55.01.03.0113 | Modifica ..... | Foglio --

E24*13R11/18*0056*02

Disegno per omologazione
Drawing for type-approval

Varianti/variants	Versioni/versions	A	B
B??	??CB?????????????P?? ?	2835	1365
B??	??CB?????????????Q?? ?	2880	1320
B??	??CB?????????????R?? ?	2790	1410

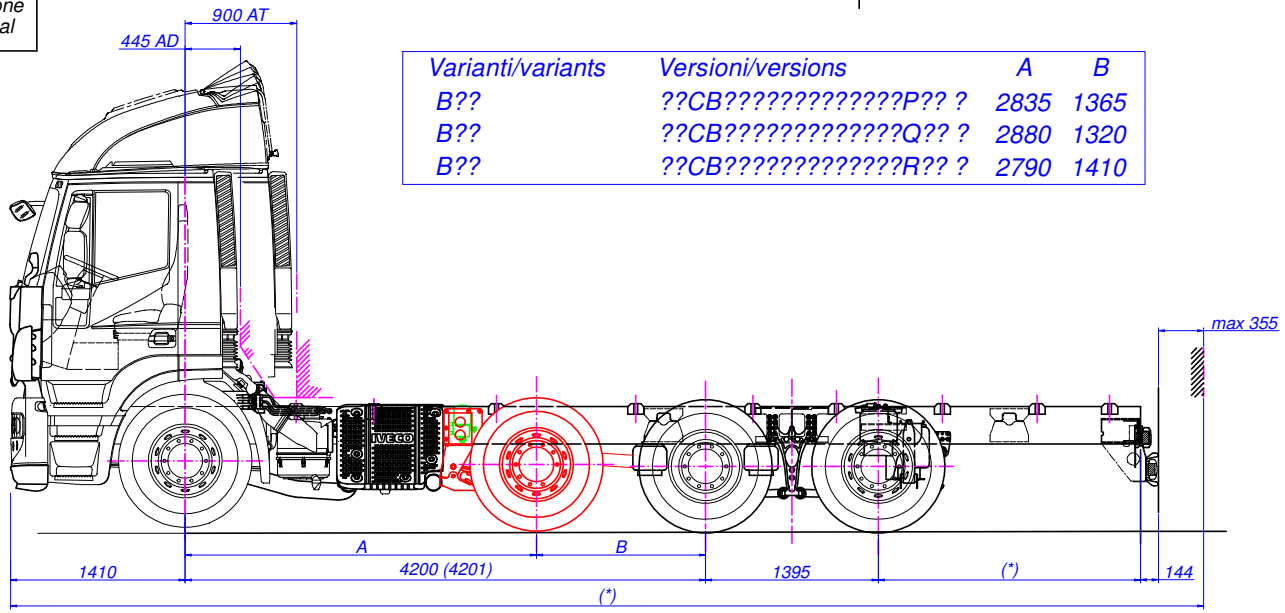

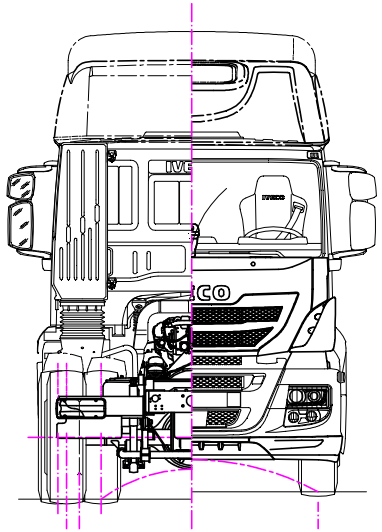

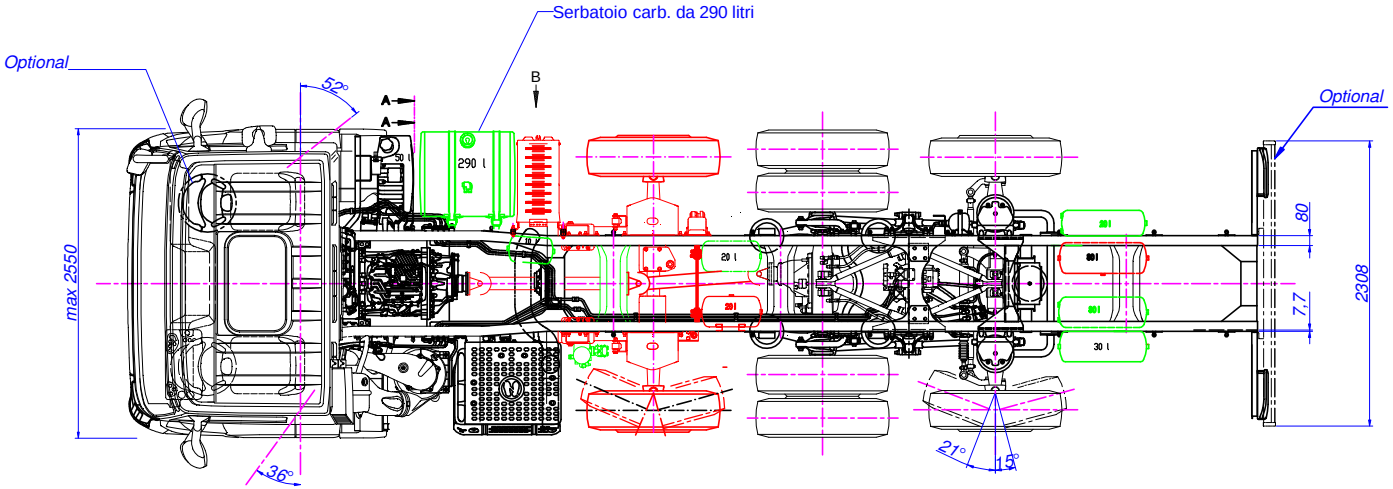

Nota (*): vedere scheda informativa
Note (*): see information document

Vista A / View A

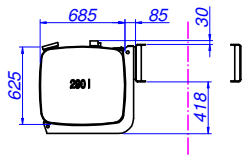

Vista B / View B

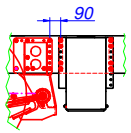

model 6x2 P	Fdp	engine
AD/AT260X31,33,36,40Y/PS HR/SR DN	D26Y	C9
AD/AT260X42,46,48Y/PS HR/SR DN	D36Y	C11

Disegnato da	Controllato da	Data	Scala
P. M.	.....	16.05.2018	.....

Quote senza indicazione di tolleranza secondo tabella UNI EN 22768/1, con grado di precisione

Modifiche

Formato disegno .....

S.T. System Truck S.p.A.
via Paesa, 28 - I 46048 Roverbella (MN)
tel. +39 0376 696809 - info@stsystemtruck.com

TITOLO
FIGURINO IVECO STRALIS X-WAY AD AT 260 YPS EURO 6
CONF. 1+3 - PASSO 4200 MM

N° DISEGNO 55.01.03.0114

Modifica .....

Foglio --

E24*13R11/18*0056*02

Disegno per omologazione
Drawing for type-approval

Varianti/variants	Versioni/versions	A	B
B??	??DB?????????????P?? ?	3135	1365
B??	??DB?????????????Q?? ?	3180	1320
B??	??DB?????????????R?? ?	3090	1410

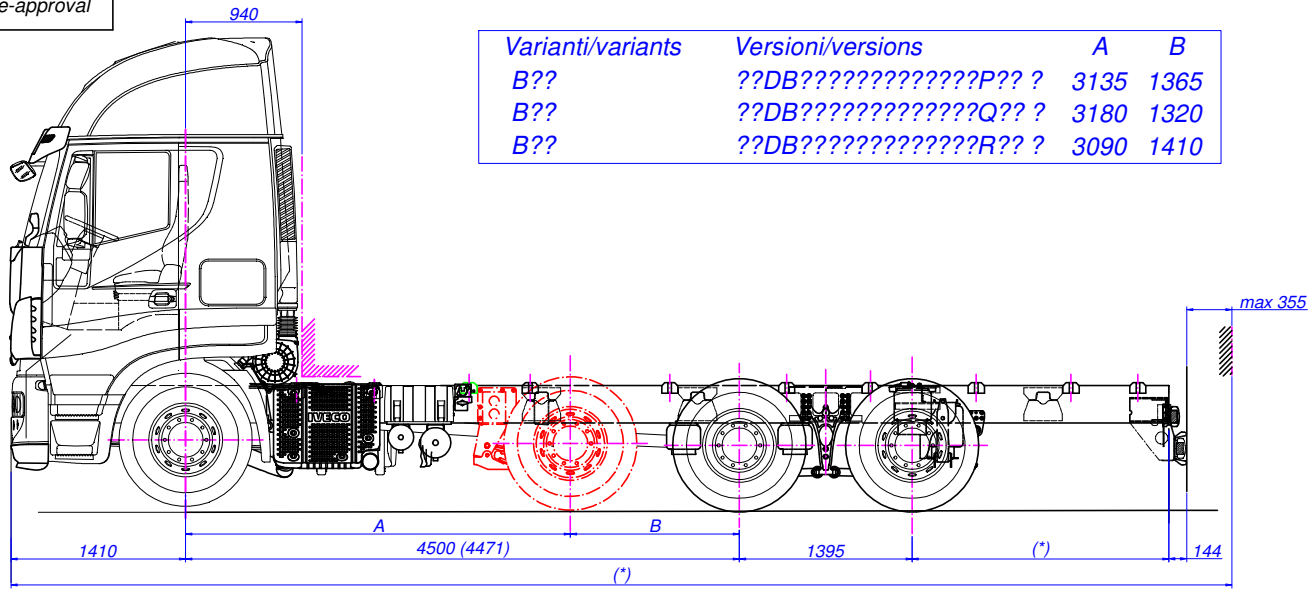

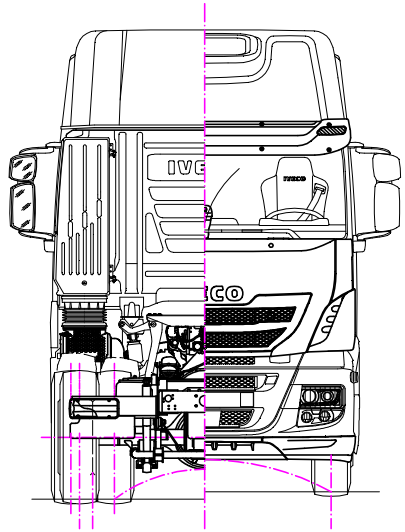

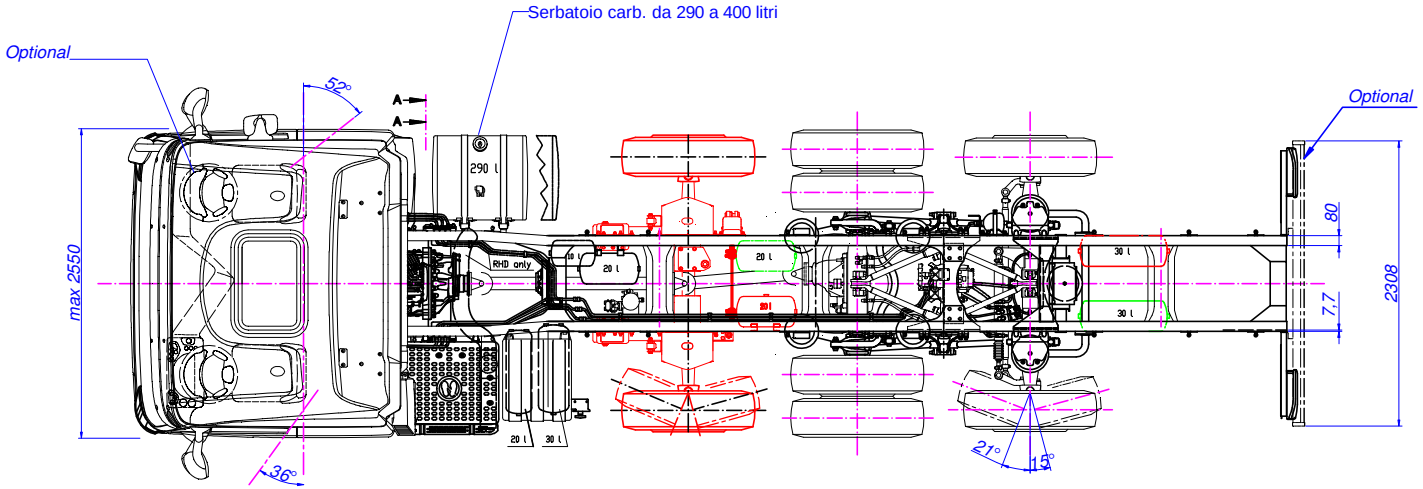

Nota (*): vedere scheda informativa
Note (*): see information document

Vista A / View A

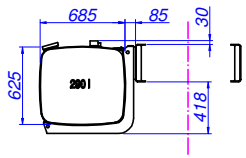

model 6x2 P	Fdp	engine
AS260X42,46,48Y/PS HR/SR DN	C46Y	C11
AS260X51,57Y/PS HR/SR DN	C56Y	C13

Disegnato da	Controllato da	Data	Scala	Quote senza indicazione di tolleranza secondo tabella UNI EN 22768/1, con grado di precisione	Modifiche
P. M.	.....	16.05.2018	.....		Formato disegno .....

S.T. System Truck S.p.A.
via Paesa, 28 - I 46048 Roverbella (MN)
tel. +39 0376 696809 - info@stsystemtruck.com

TITOLO FIGURINO IVECO STRALIS X-WAY AS 260 YPS EURO 6 CONF. 1+3 - PASSO 4500 MM

N° DISEGNO 55.01.03.0115 | Modifica ..... | Foglio --

E24*13R11/18*0056*02

Disegno per omologazione
Drawing for type-approval

Varianti/variants	Versioni/versions	A	B
B??	??DB?????????????P?? ?	3135	1365
B??	??DB?????????????Q?? ?	3180	1320
B??	??DB?????????????R?? ?	3090	1410

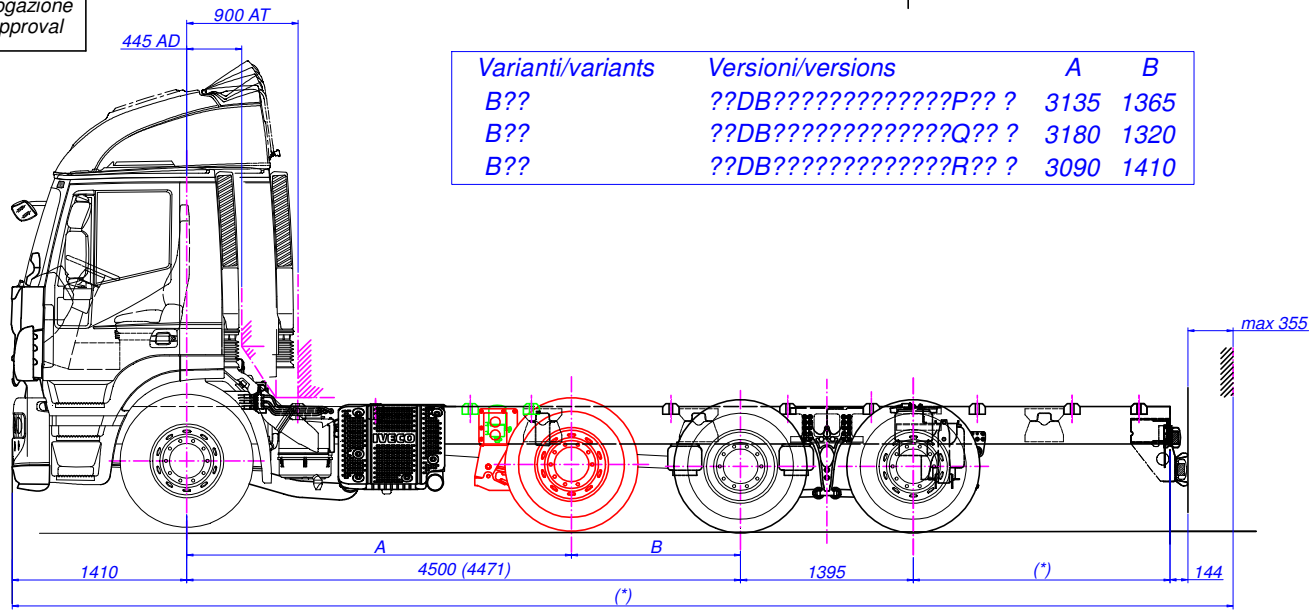

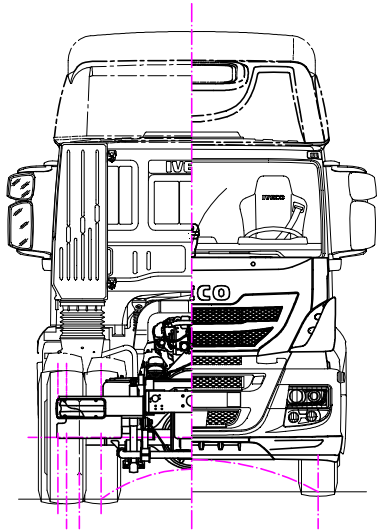

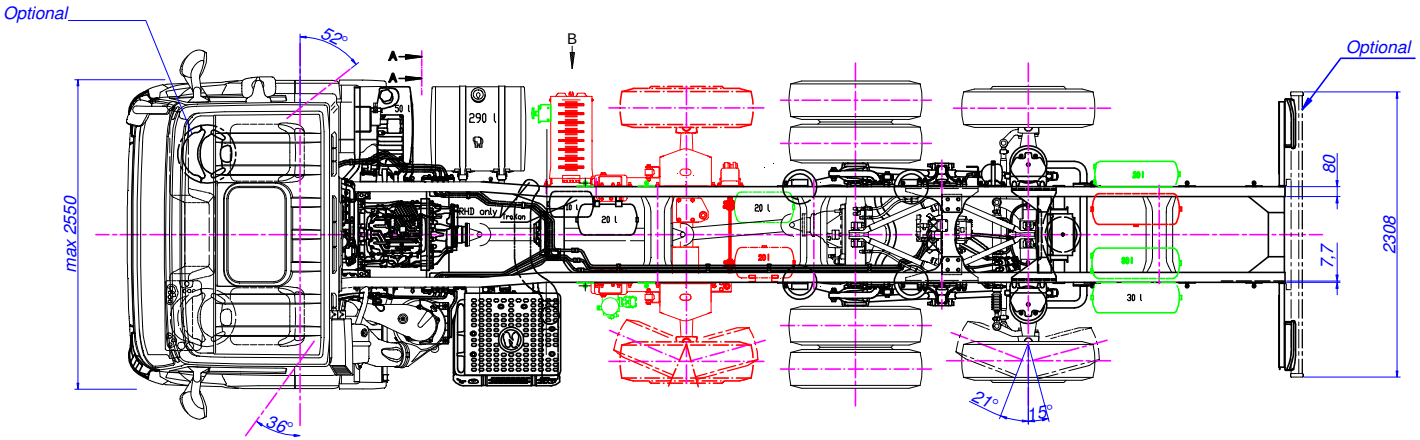

Nota (*): vedere scheda informativa
Note (*): see information document

Vista A / View A

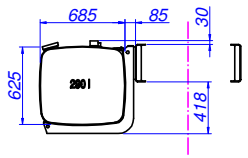

Vista B / View B

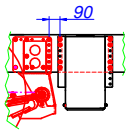

model 6x2 P	Fdp	engine
AD/AT260X31,33,36,40Y/PS HR/SR DN	D26Y	C9
AD/AT260X42,46,48Y/PS HR/SR DN	D36Y	C11

Disegnato da	Controllato da	Data	Scala
P. M.	.....	16.05.2018	.....

Quote senza indicazione di tolleranza secondo tabella UNI EN 22768/1, con grado di precisione

Modifiche

Formato disegno .....

S.T. System Truck S.p.A.
via Paesa, 28 - I 46048 Roverbella (MN)
tel. +39 0376 696809 - info@stsystemtruck.com

TITOLO FIGURINO IVECO STRALIS X-WAY AD AT 260 YPS EURO 6 CONF. 1+3 - PASSO 4500 MM

N° DISEGNO 55.01.03.0116

Modifica .....

Foglio --

E24*13R11/18*0056*02

Disegno per omologazione
Drawing for type-approval

Varianti/variants	Versioni/versions	A	B
B??	??EB?????????????P?? ?	3435	1365
B??	??EB?????????????Q?? ?	3480	1320
B??	??EB?????????????R?? ?	3390	1410

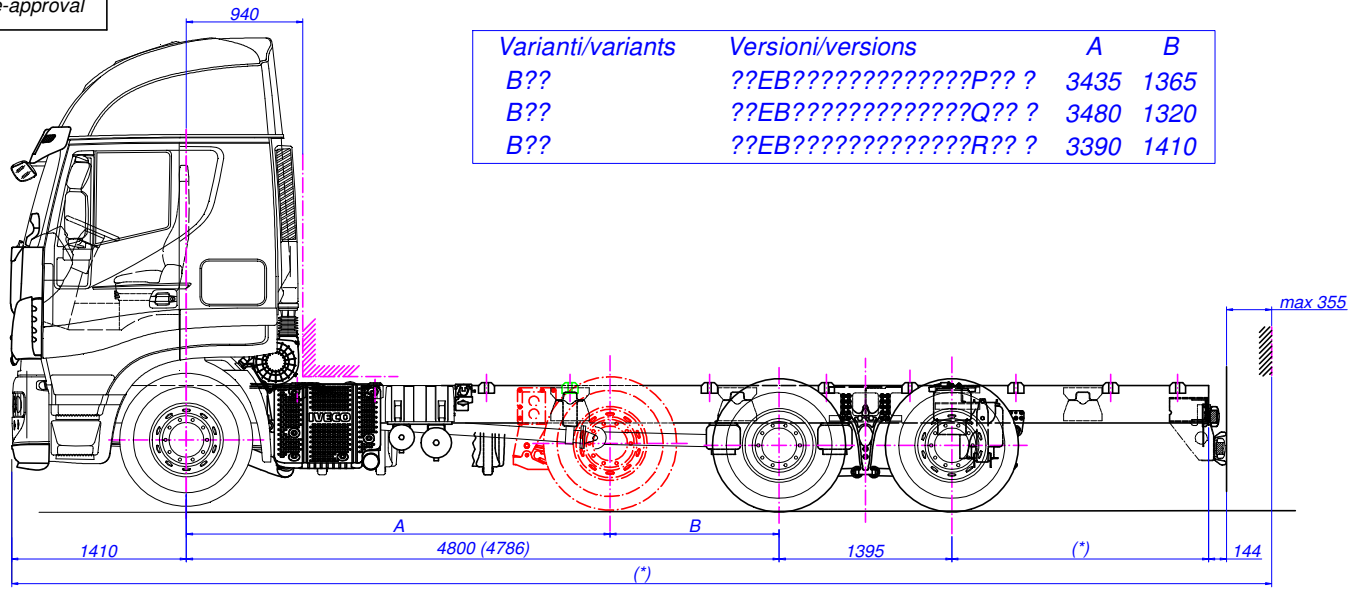

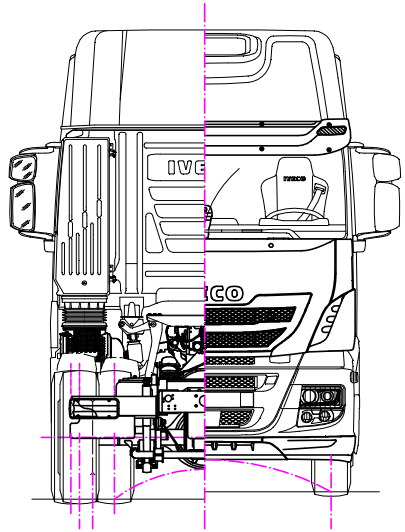

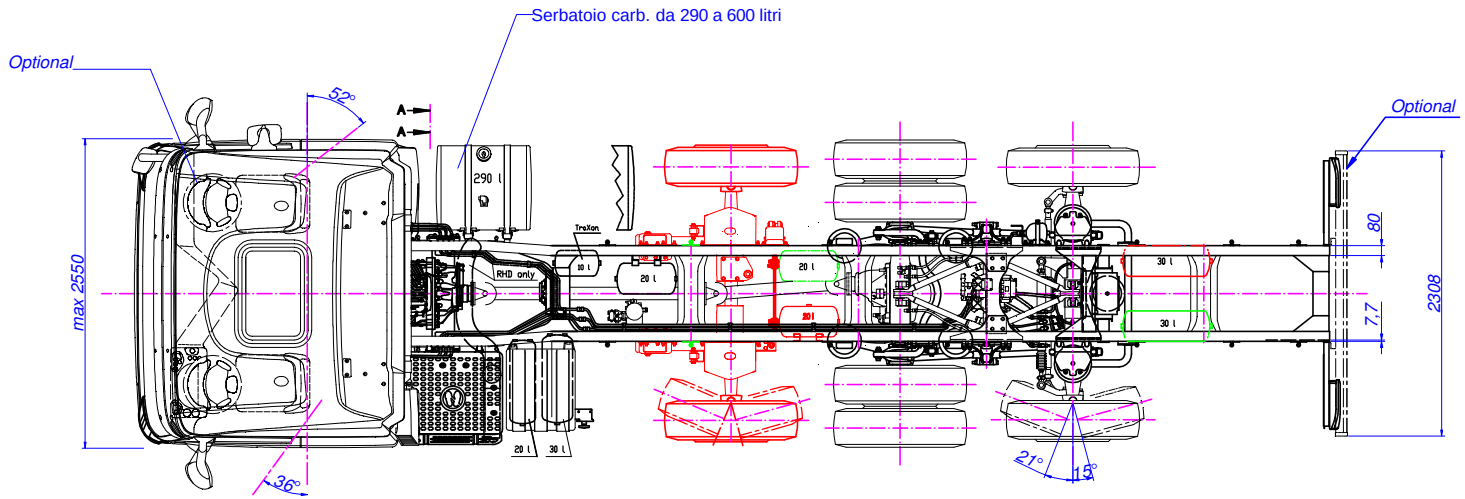

Nota (*): vedere scheda informativa
Note (*): see information document

Vista A / View A

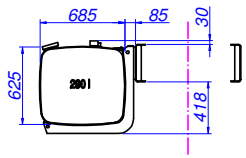

model 6x2 P	Fdp	engine
AS260X42,46,48Y/PS HR/SR DN	C46Y	C11
AS260X51,57Y/PS HR/SR DN	C56Y	C13

Disegnato da	Controllato da	Data	Scala
P. M.	.....	16.05.2018	.....

Quote senza indicazione di tolleranza secondo tabella UNI EN 22768/1, con grado di precisione

Modifiche

Formato disegno .....

S.T. System Truck S.p.A.
via Paesa, 28 - I 46048 Roverbella (MN)
tel. +39 0376 696809 - info@stsystemtruck.com

TITOLO
FIGURINO IVECO STRALIS X-WAY AS 260 YPS EURO 6
CONF. 1+3 - PASSO 4800 MM

N° DISEGNO 55.01.03.0117

Modifica .....

Foglio --

E24*13R11/18*0056*02

Disegno per omologazione
Drawing for type-approval

Varianti/variants	Versioni/versions	A	B
B??	??EB?????????????P?? ?	3435	1365
B??	??EB?????????????Q?? ?	3480	1320
B??	??EB?????????????R?? ?	3390	1410

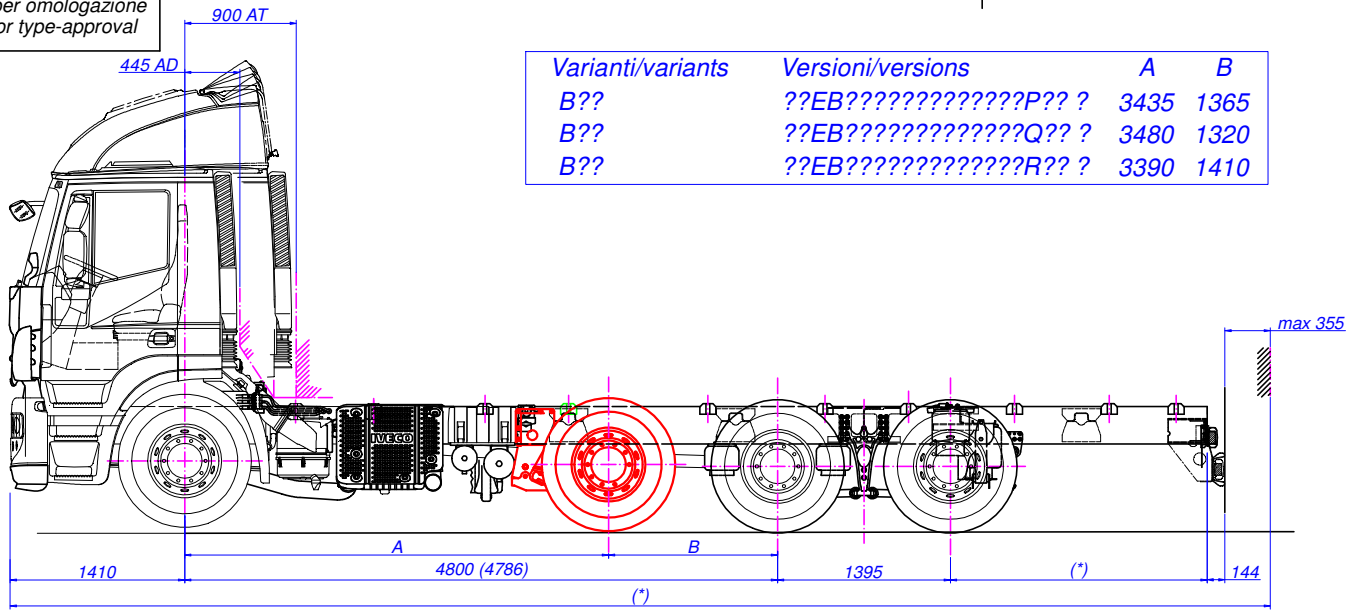

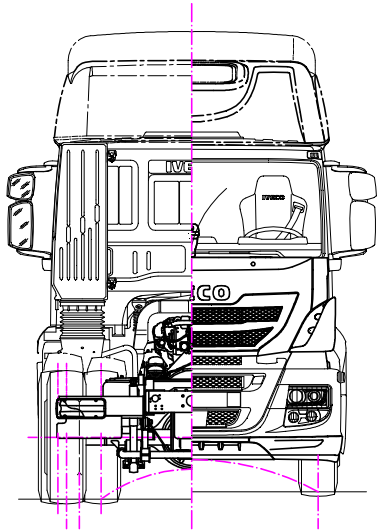

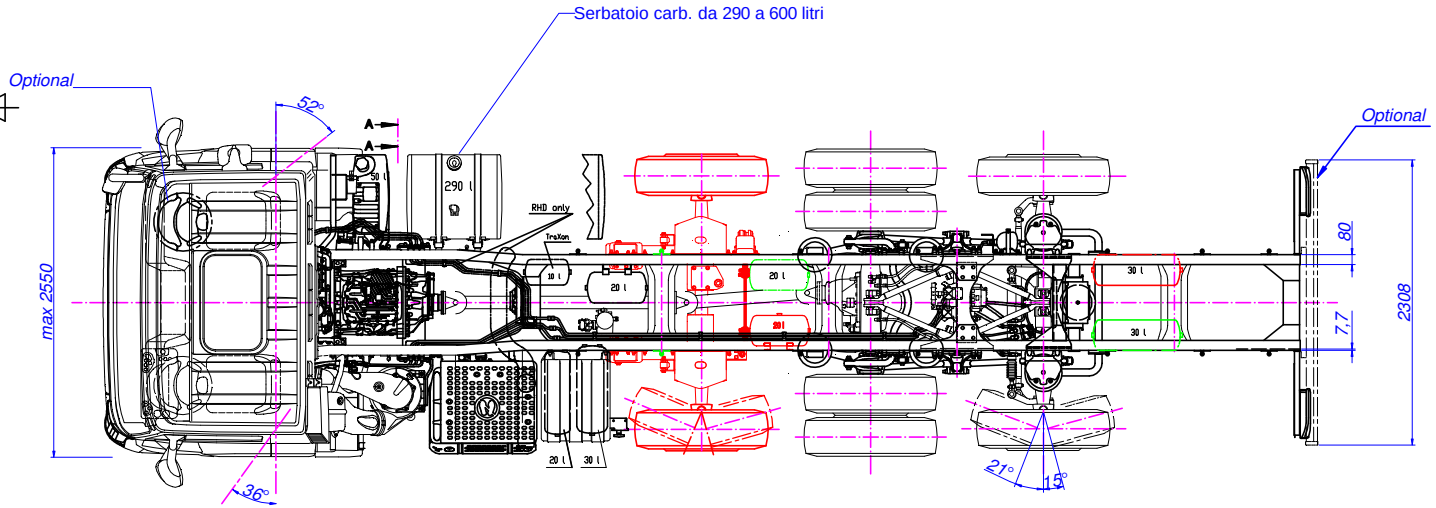

Nota (*): vedere scheda informativa
Note (*): see information document

Vista A / View A

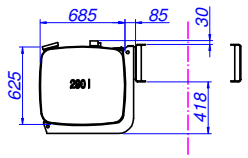

model 6x2 P	Fdp	engine
AD/AT260X31,33,36,40Y/PS HR/SR DN	D26Y	C9
AD/AT260X42,46,48Y/PS HR/SR DN	D36Y	C11

Disegnato da	Controllato da	Data	Scala
P. M.	.....	16.05.2018	.....

Quote senza indicazione di tolleranza secondo tabella UNI EN 22768/1, con grado di precisione

Modifiche

Formato disegno .....

S.T. System Truck S.p.A.
via Paesa, 28 - I 46048 Roverbella (MN)
tel. +39 0376 696809 - info@stsystemtruck.com

TITOLO
FIGURINO IVECO STRALIS X-WAY AD AT 260 YPS EURO 6
CONF. 1+3 - PASSO 4800 MM

N° DISEGNO 55.01.03.0118

Modifica .....

Foglio --

E24*13R11/18*0056*02

Disegno per omologazione
Drawing for type-approval

Varianti/variants	Versioni/versions	A	B
B??	??FB?????????????P?? ?	3735	1365
B??	??FB?????????????Q?? ?	3780	1320
B??	??FB?????????????R?? ?	3690	1410

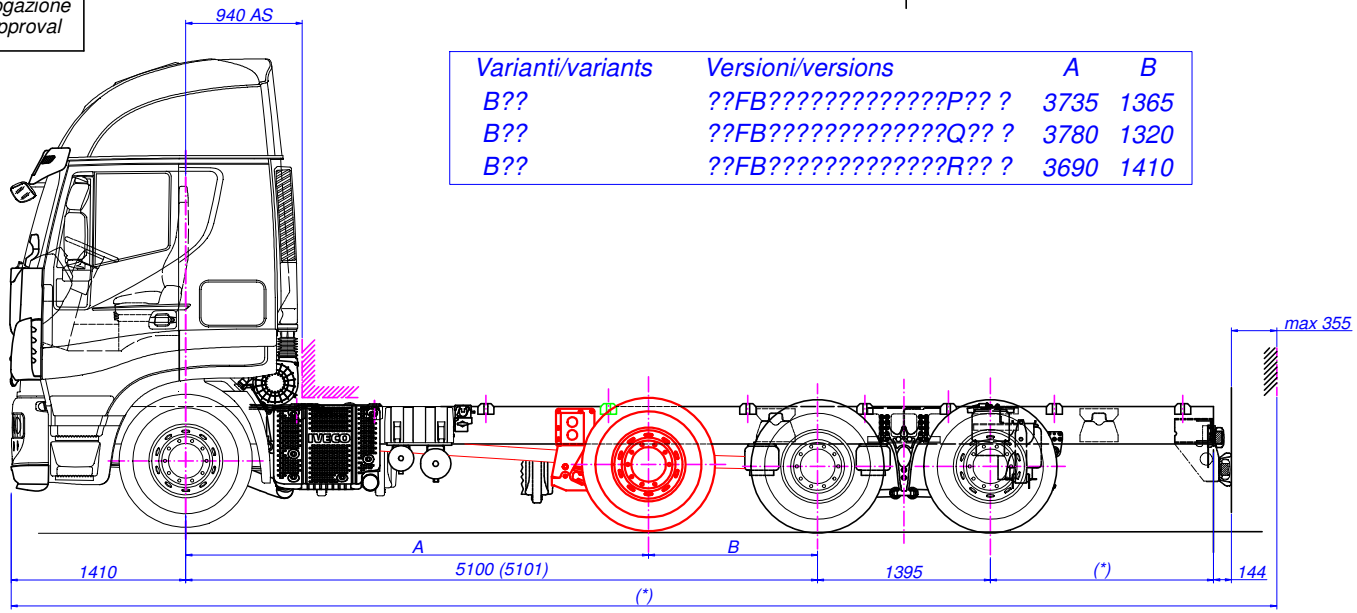

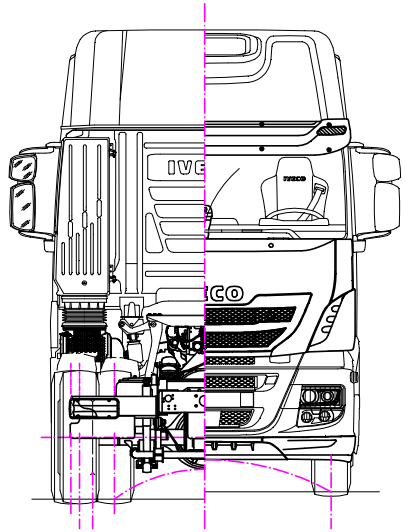

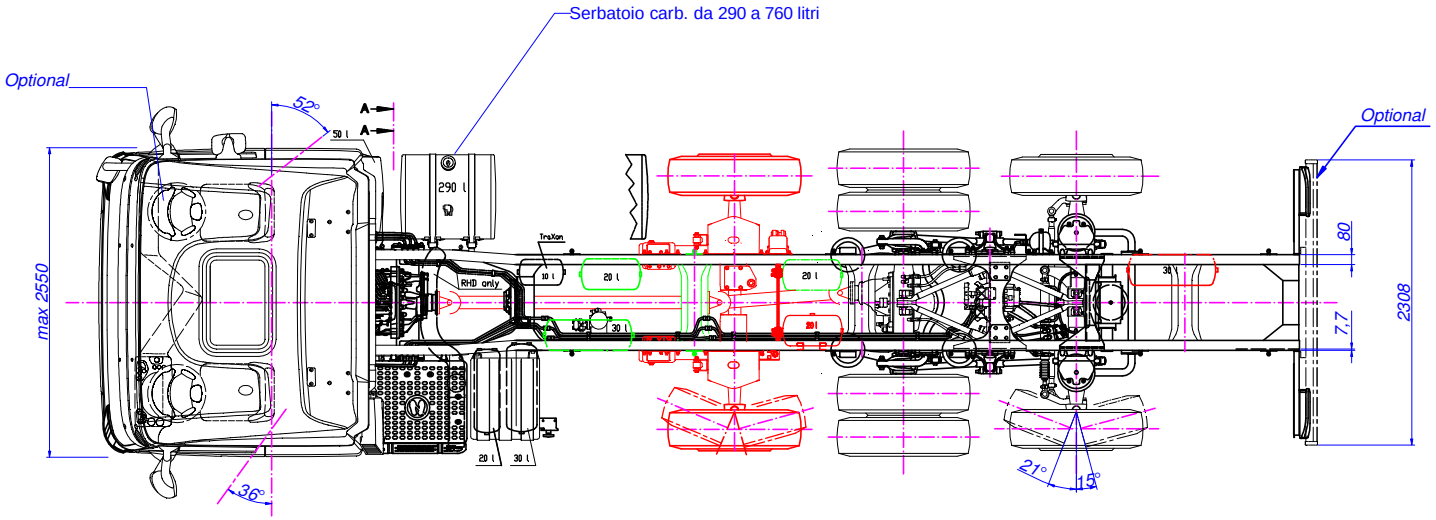

Nota (*): vedere scheda informativa
Note (*): see information document

Vista A / View A

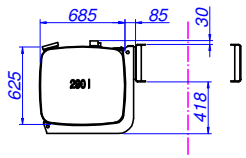

model 6x2 P	Fdp	engine
AS260X42,46,48Y/PS HR/SR DN	C46Y	C11
AS260X51,57Y/PS HR/SR DN	C56Y	C13

Disegnato da	Controllato da	Data	Scala
P. M.	.....	16.05.2018	.....

Quote senza indicazione di tolleranza secondo tabella UNI EN 22768/1, con grado di precisione

Modifiche

Formato disegno .....

S.T. System Truck S.p.A.
via Paesa, 28 - I 46048 Roverbella (MN)
tel. +39 0376 696809 - info@stsystemtruck.com

TITOLO FIGURINO IVECO STRALIS X-WAY AS 260 YPS EURO 6 CONF. 1+3 - PASSO 5100 MM

N° DISEGNO 55.01.03.0119 | Modifica ..... | Foglio --

E24*13R11/18*0056*02

Disegno per omologazione
Drawing for type-approval

Varianti/variants	Versioni/versions	A	B
B??	??FB?????????????P?? ?	3735	1365
B??	??FB?????????????Q?? ?	3780	1320
B??	??FB?????????????R?? ?	3690	1410

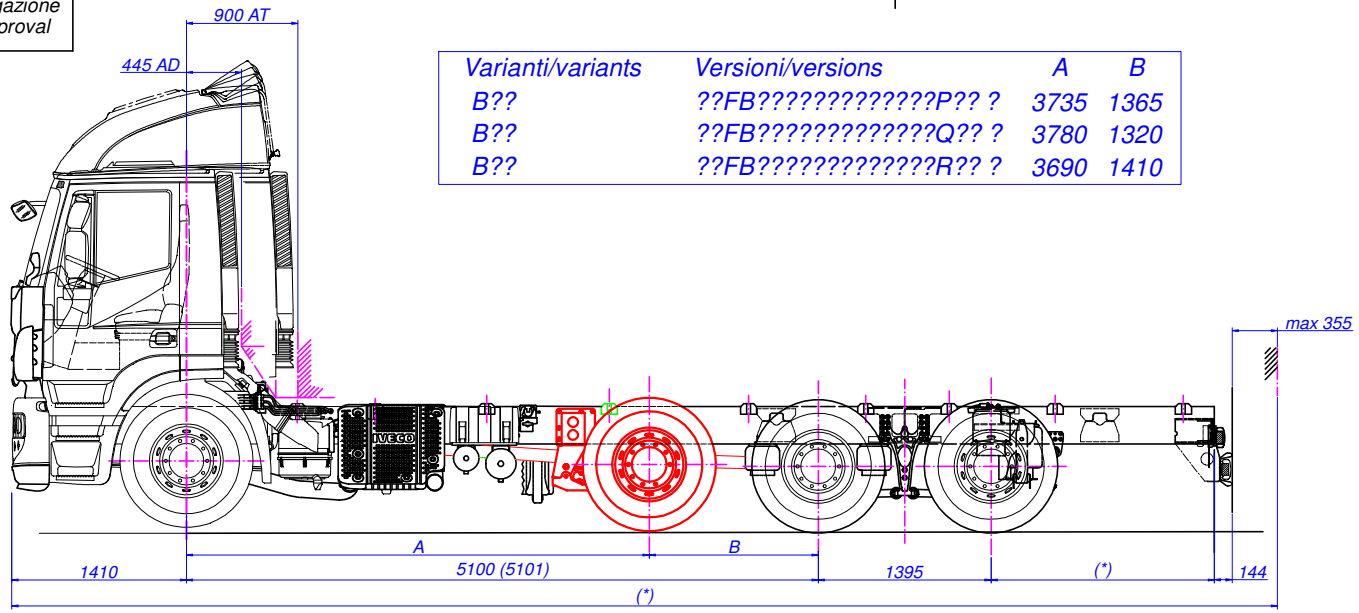

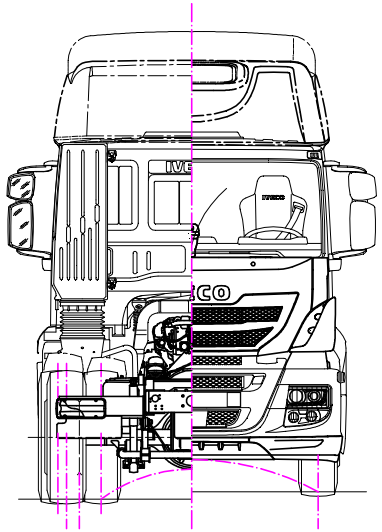

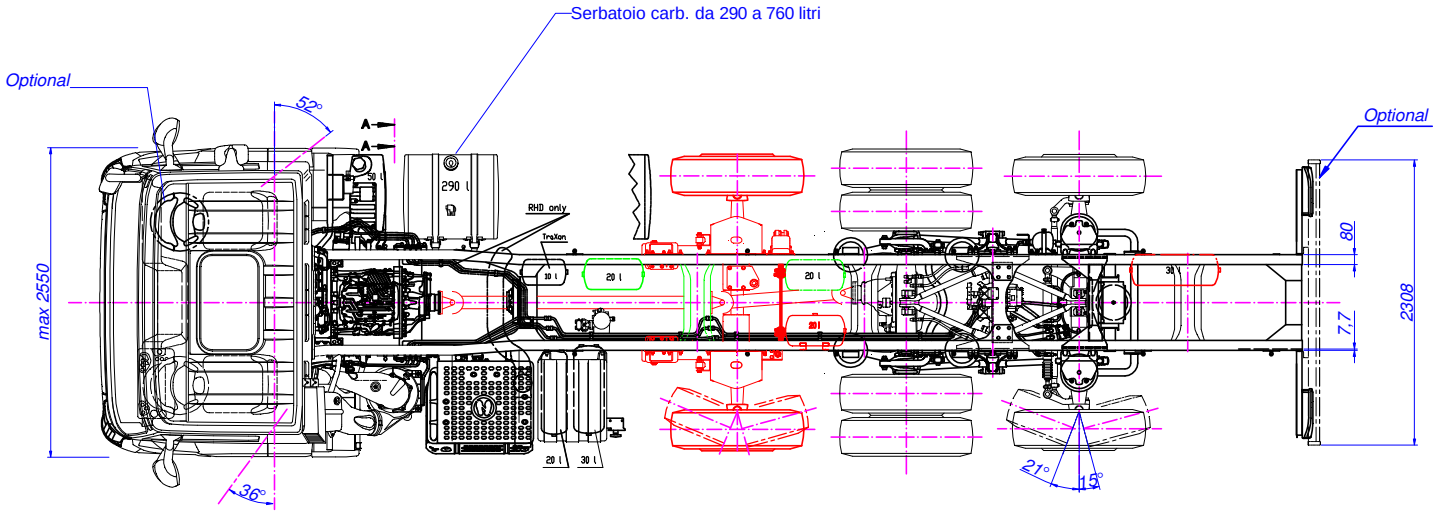

Nota (*): vedere scheda informativa
Note (*): see information document

Vista A / View A

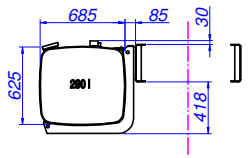

model 6x2 P	Fdp	engine
AD/AT260X31,33,36,40Y/PS HR/SR DN	D26Y	C9
AD/AT260X42,46,48Y/PS HR/SR DN	D36Y	C11

Disegnato da	Controllato da	Data	Scala
P. M.	.....	16.05.2018	.....

Quote senza indicazione di tolleranza secondo tabella UNI EN 22768/1, con grado di precisione

Modifiche

Formato disegno .....

S.T. System Truck S.p.A.
via Paesa, 28 - I 46048 Roverbella (MN)
tel. +39 0376 696809 - info@stsystemtruck.com

TITOLO
FIGURINO IVECO STRALIS X-WAY AD AT 260 YPS EURO 6
CONF. 1+3 - PASSO 5100 MM

N° DISEGNO 55.01.03.0120
Modifica .....
Foglio --

E24*13R11/18*0056*02

Disegno per omologazione
Drawing for type-approval

Varianti/variants	Versioni/versions	A	B
B??	??GB?????????????P?? ?	4335	1365
B??	??GB?????????????Q?? ?	4380	1320
B??	??GB?????????????R?? ?	4290	1410

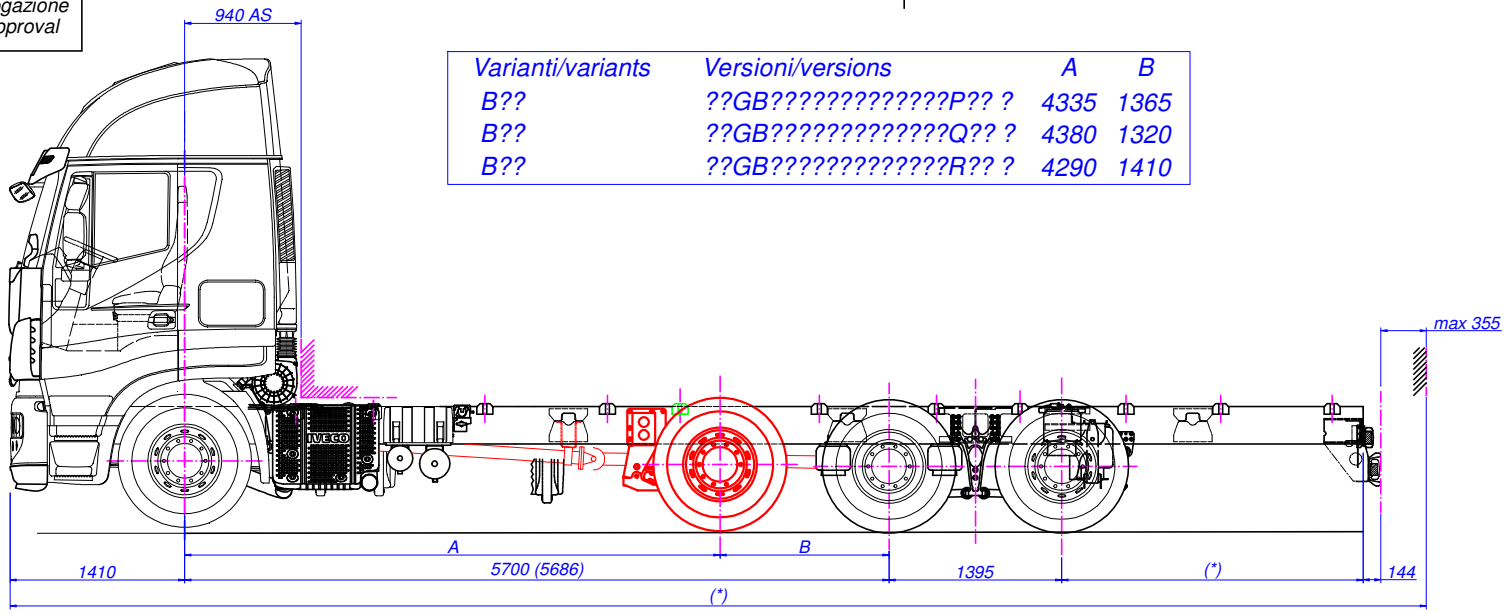

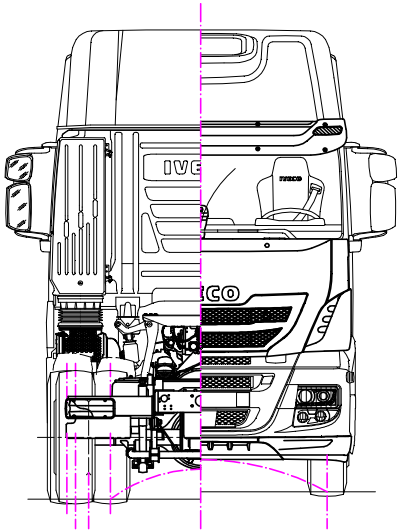

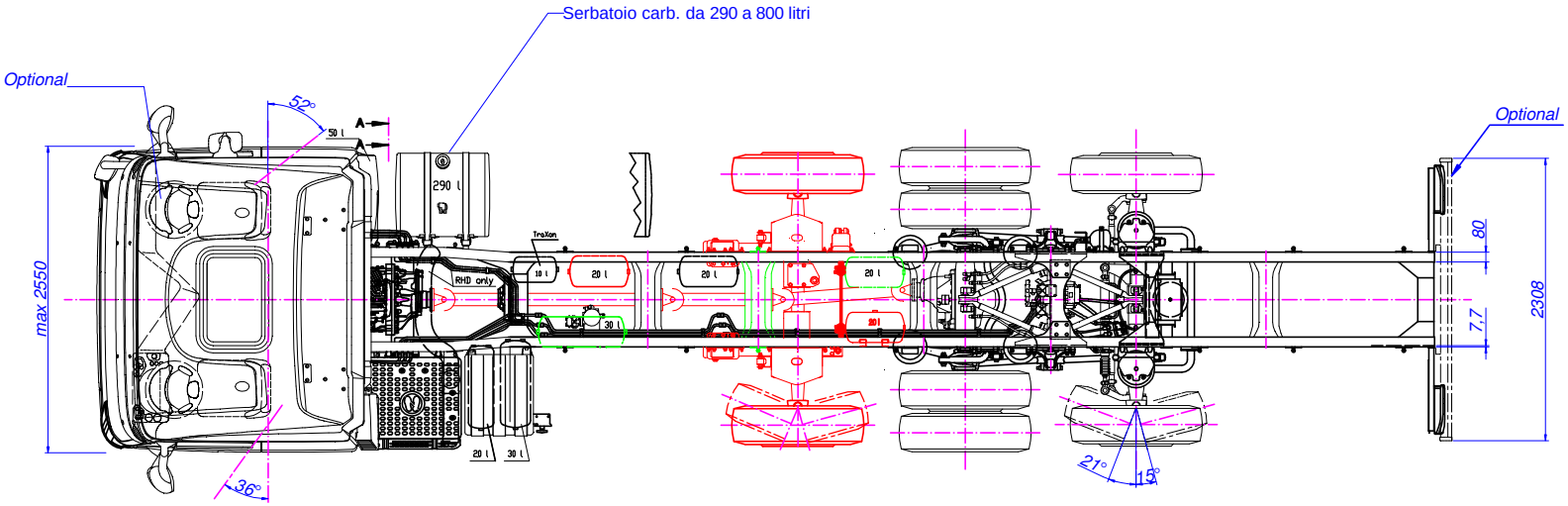

Vista A / View A

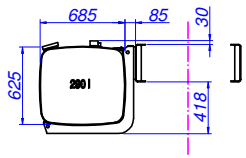

Nota (*): vedere scheda informativa
Note (*): see information document

model 6x2 P	Fdp	engine
AS260X42,46,48Y/PS HR/SR ⊡N	C46Y	C11
AS260X51,57Y/PS HR/SR ⊡N	C56Y	C13

Disegnato da	Controllato da	Data	Scala
P. M.	.....	16.05.2018	.....

Quote senza indicazione di tolleranza secondo tabella UNI EN 22768/1, con grado di precisione

Modifiche

Formato disegno .....

S.T. System Truck S.p.A.
via Paesa, 28 - I 46048 Roverbella (MN)
tel. +39 0376 696809 - info@stsystemtruck.com

TITOLO
FIGURINO IVECO STRALIS X-WAY AS 260 YPS EURO 6
CONF. 1+3 - PASSO 5700 MM

N° DISEGNO 55.01.03.0121

Modifica .....

Foglio --

E24*13R11/18*0056*02

Disegno per omologazione
Drawing for type-approval

Varianti/variants	Versioni/versions	A	B
B??	??GB?????????????P?? ?	4335	1365
B??	??GB?????????????Q?? ?	4380	1320
B??	??GB?????????????R?? ?	4290	1410

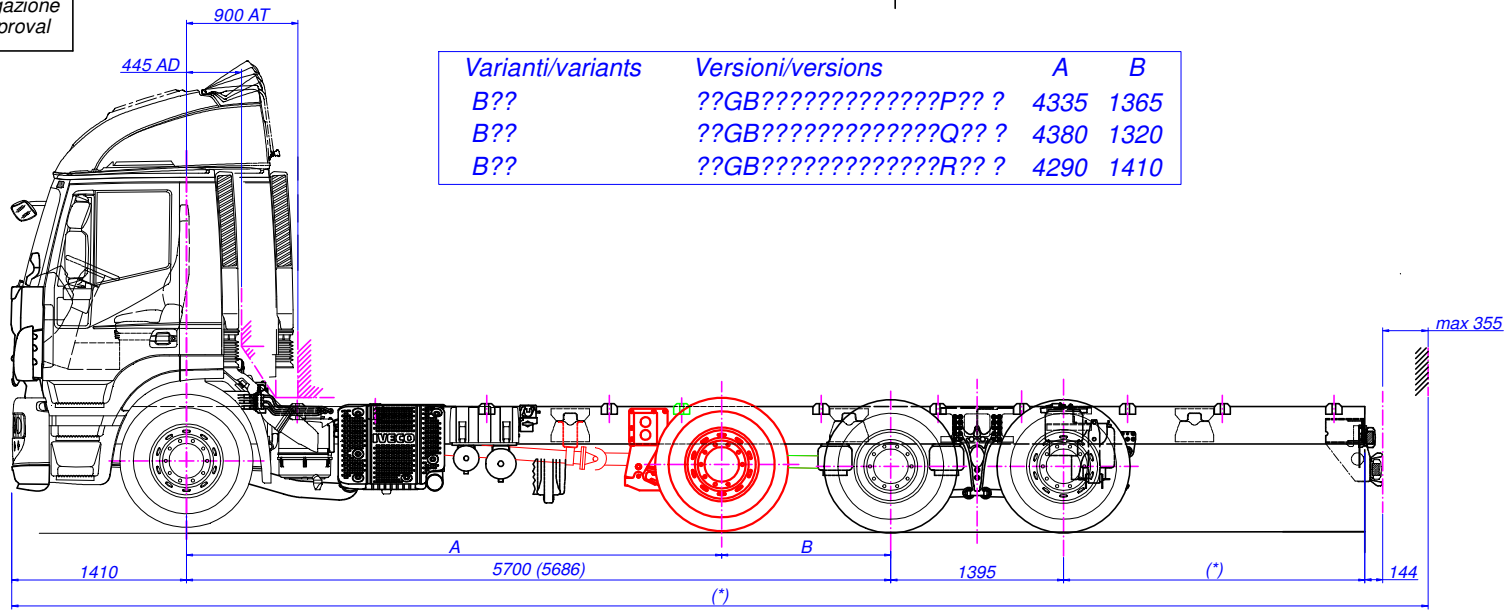

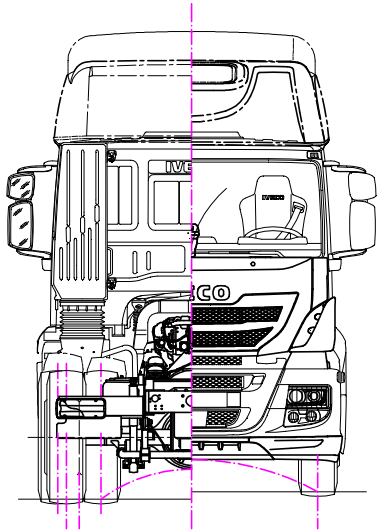

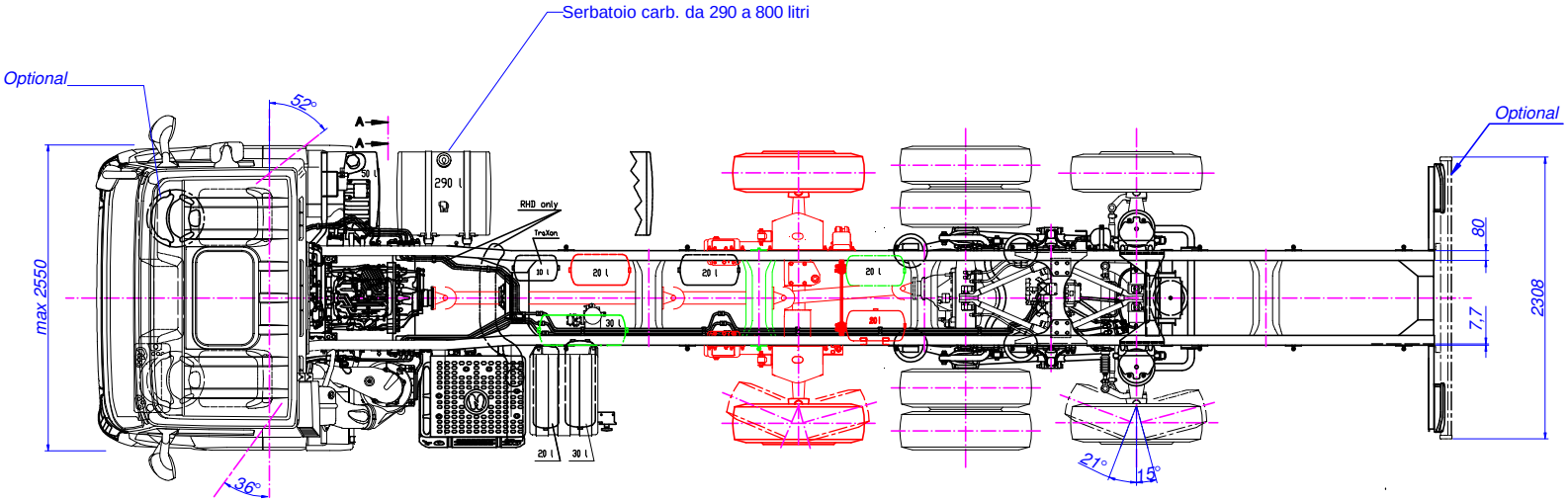

Nota (*): vedere scheda informativa
Note (*): see information document

Vista A / View A

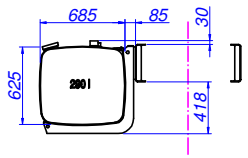

model 6x2 P	Fdp	engine
AD/AT260X31,33,36,40Y/PS HR/SR DN	D26Y	C9
AD/AT260X42,46,48Y/PS HR/SR DN	D36Y	C11

Disegnato da	Controllato da	Data	Scala
P. M.	.....	16.05.2018	.....

Quote senza indicazione di tolleranza secondo tabella UNI EN 22768/1, con grado di precisione

Modifiche

Formato disegno .....

S.T. System Truck S.p.A.
via Paesa, 28 - I 46048 Roverbella (MN)
tel. +39 0376 696809 - info@stsystemtruck.com

TITOLO
FIGURINO IVECO STRALIS X-WAY AD AT 260 YPS EURO 6
CONF. 1+3 - PASSO 5700 MM

N° DISEGNO 55.01.03.0122

Modifica .....

Foglio --

E24*13R11/18*0056*02

Disegno per omologazione
Drawing for type-approval

Varianti/variants	Versioni/versions	A	B
B??	??HB?????????????P?? ?	4685	1365
B??	??HB?????????????Q?? ?	4730	1320
B??	??HB?????????????R?? ?	4640	1410

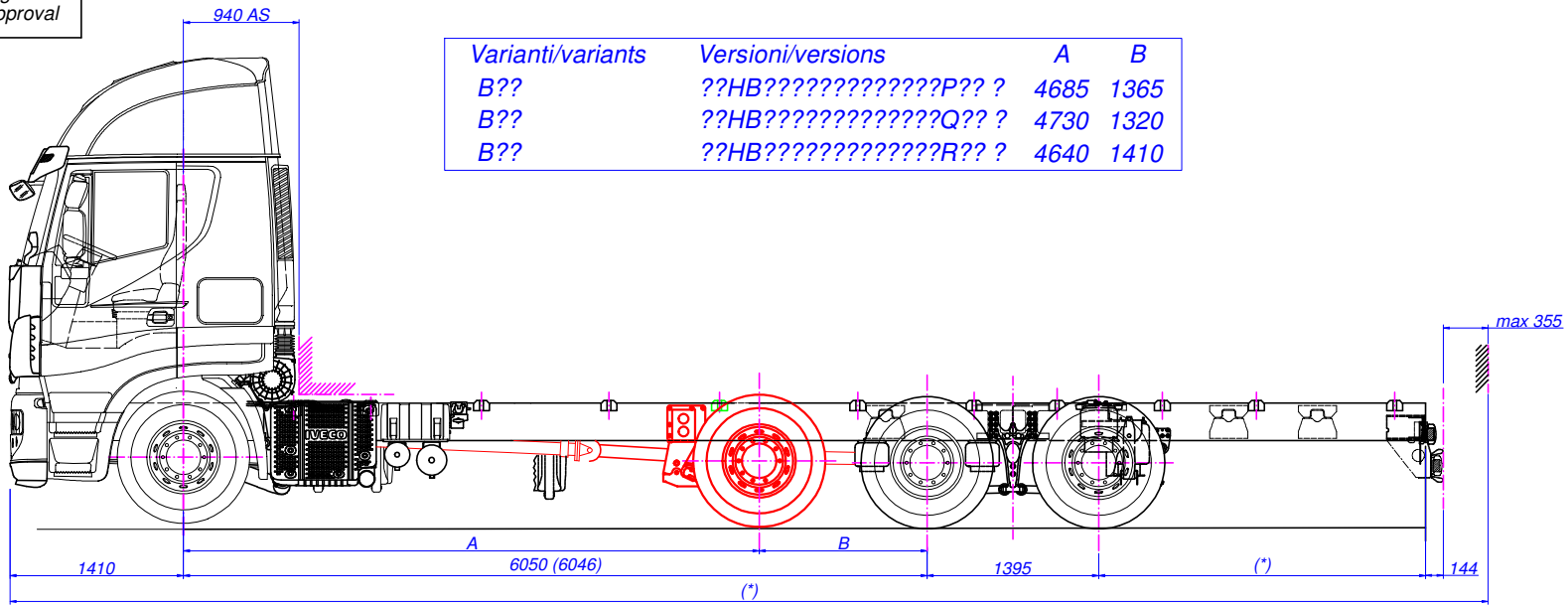

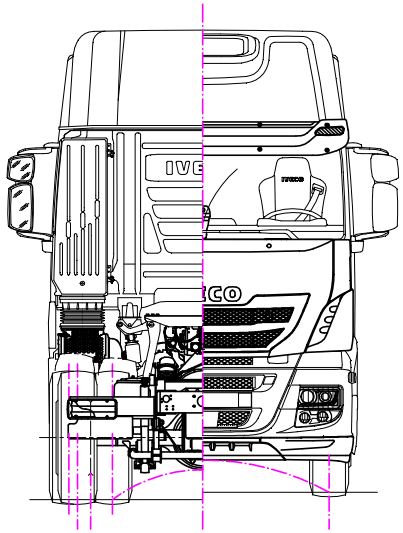

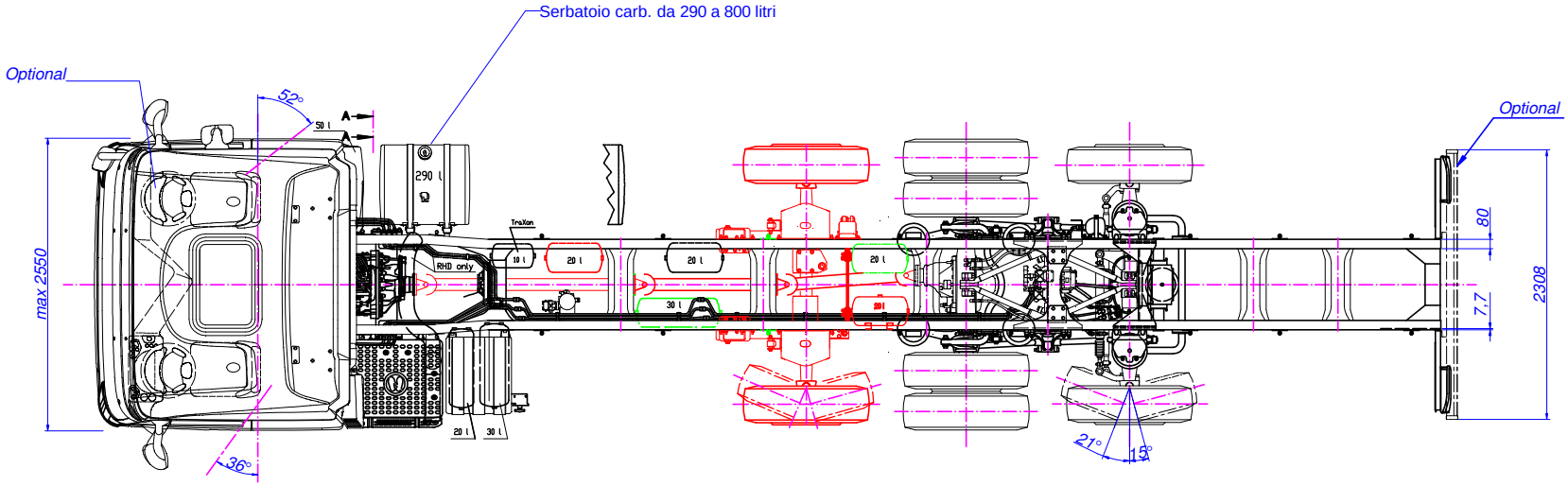

Vista A / View A

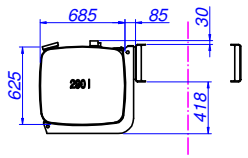

Nota (*): vedere scheda informativa
Note (*): see information document

model 6x2 P	Fdp	engine
AS260X42,46,48Y/PS HR/SR DN	C46Y	C11
AS260X51,57Y/PS HR/SR DN	C56Y	C13

Disegnato da	Controllato da	Data	Scala	Quote senza indicazione di tolleranza secondo tabella UNI EN 22768/1, con grado di precisione	Modifiche / Formato disegno
P. M.	.....	16.05.2018	.....		.....

S.T. System Truck S.p.A.
via Paesa, 28 - I 46048 Roverbella (MN)
tel. +39 0376 696809 - info@stsystemtruck.com

TITOLO: FIGURINO IVECO STRALIS X-WAY AS 260 YPS EURO 6 CONF. 1+3 - PASSO 6050 MM

N° DISEGNO: 55.01.03.0123 | Modifica: ..... | Foglio: --

E24*13R11/18*0056*02

Disegno per omologazione
Drawing for type-approval

Varianti/variants	Versioni/versions	A	B
B??	??HB?????????????P?? ?	4685	1365
B??	??HB?????????????Q?? ?	4730	1320
B??	??HB?????????????R?? ?	4640	1410

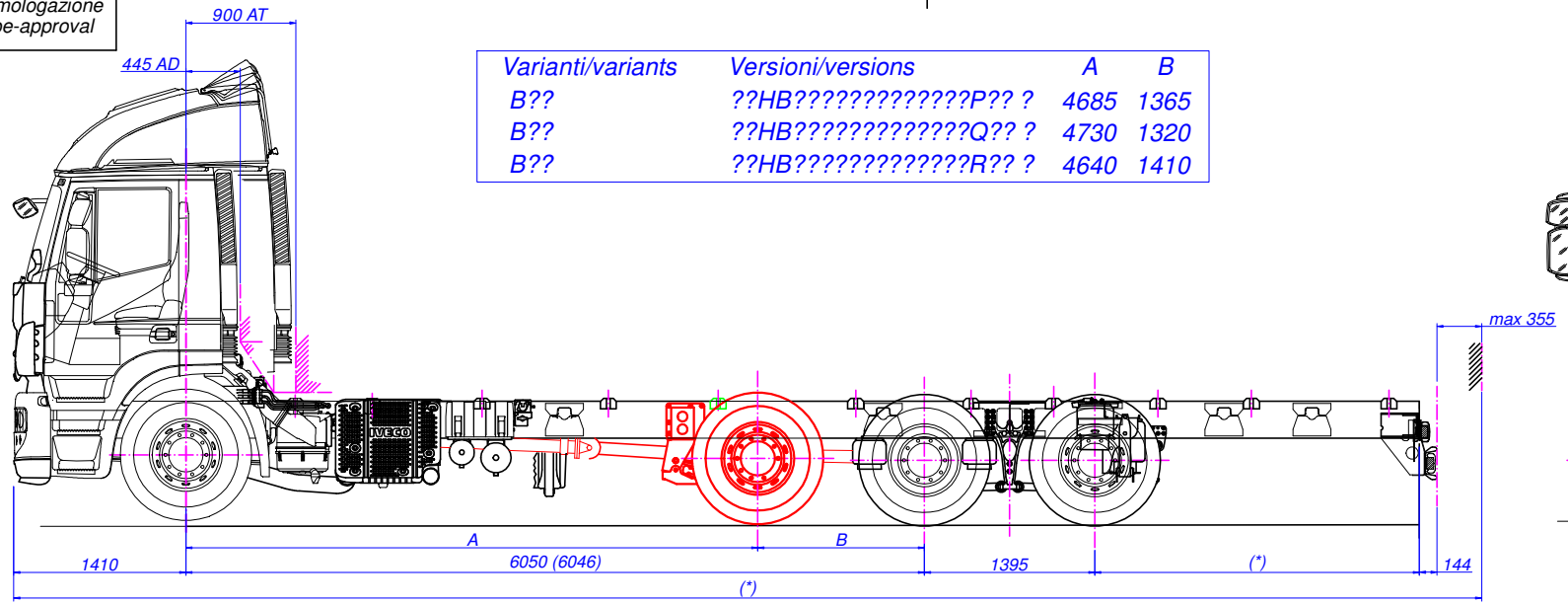

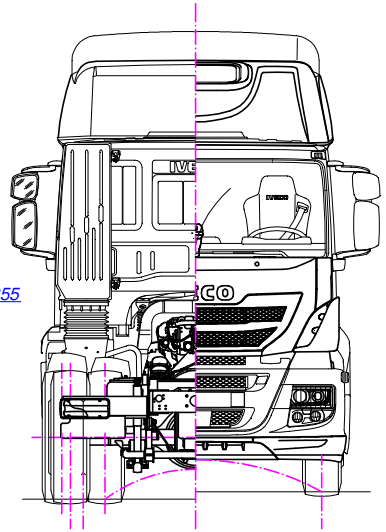

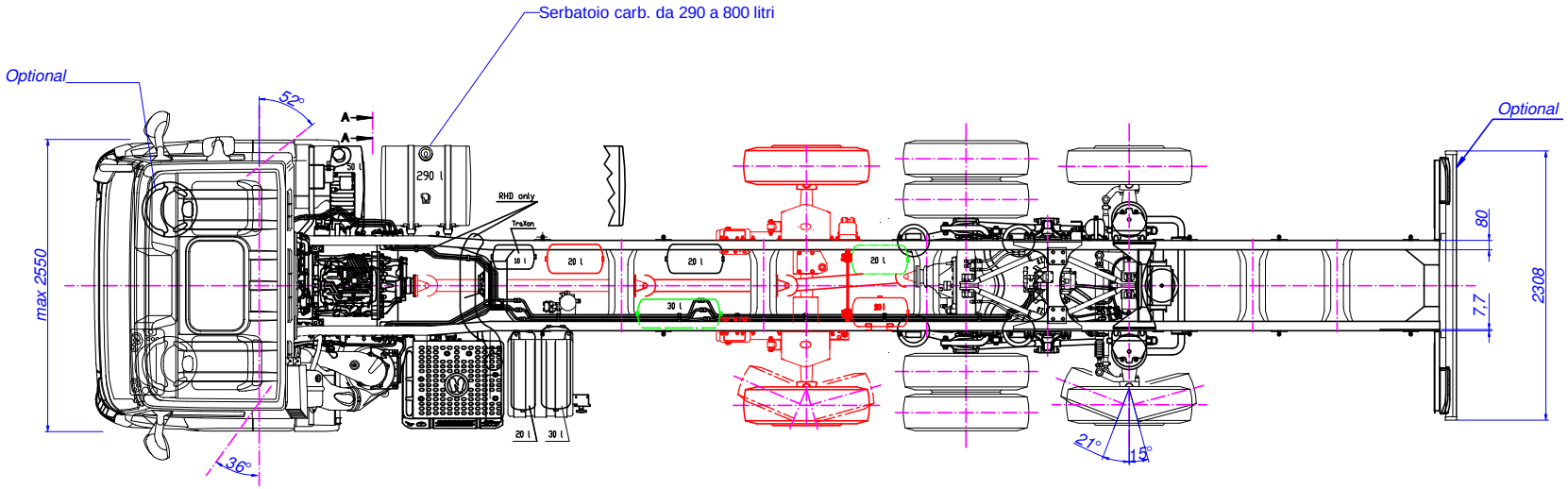

Nota (*): vedere scheda informativa
Note (*): see information document

Vista A / View A

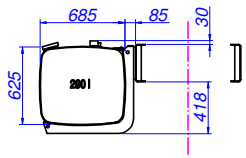

model 6x2 P	Fdp	engine
AD/AT260X31,33,36,40Y/PS HR/SR DN	D26Y	C9
AD/AT260X42,46,48Y/PS HR/SR DN	D36Y	C11

Disegnato da	Controllato da	Data	Scala
P. M.	.....	16.05.2018	.....

Quote senza indicazione di tolleranza secondo tabella UNI EN 22768/1, con grado di precisione

Modifiche

Formato disegno .....

S.T. System Truck S.p.A.
via Paesa, 28 - I 46048 Roverbella (MN)
tel. +39 0376 696809 - info@stsystemtruck.com

TITOLO
FIGURINO IVECO STRALIS X-WAY AD AT 260 YPS EURO 6
CONF. 1+3 - PASSO 6050 MM

N° DISEGNO 55.01.03.0124
Modifica .....
Foglio --

E24*13R11/18*0056*02

Disegno per omologazione
Drawing for type-approval

Varianti/variants	Versioni/versions	A	B
2?S	??CB?????????????P?? ?	2835	1365
2?S	??CB?????????????Q?? ?	2880	1320
2?S	??CB?????????????R?? ?	2790	1410

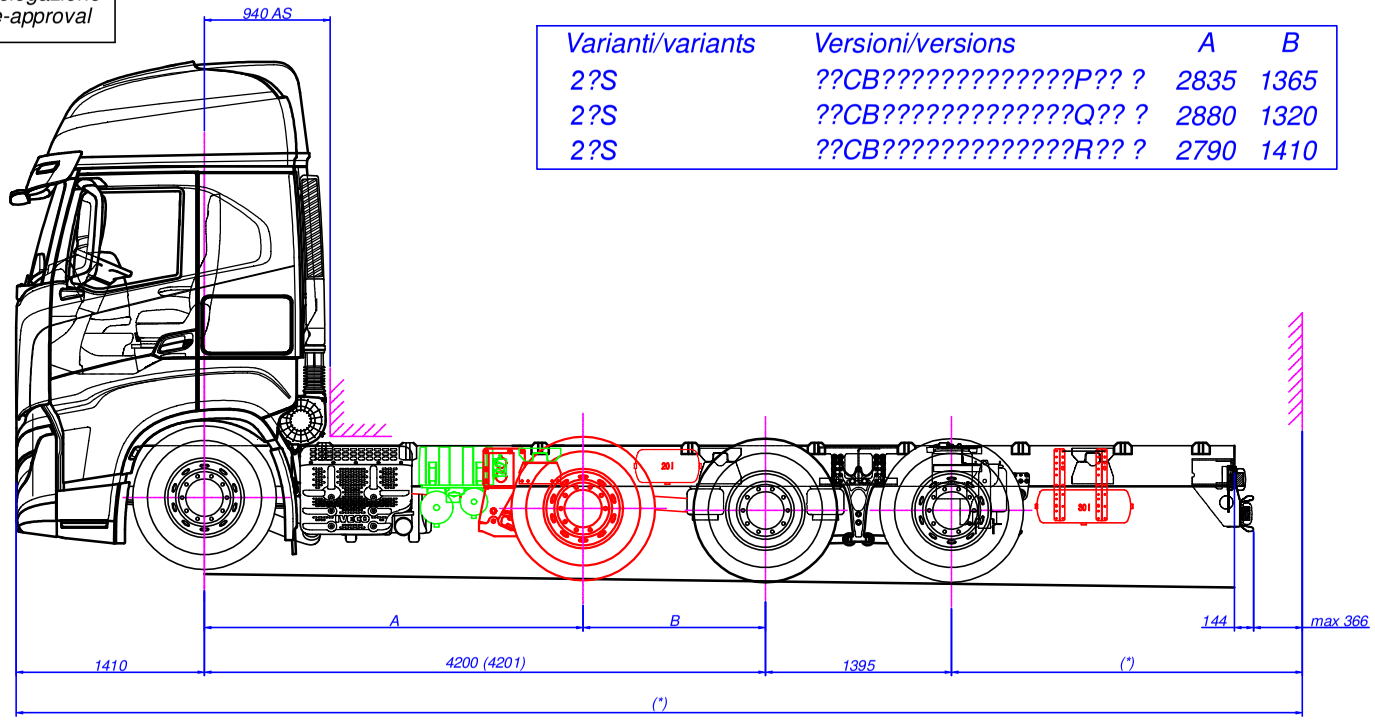

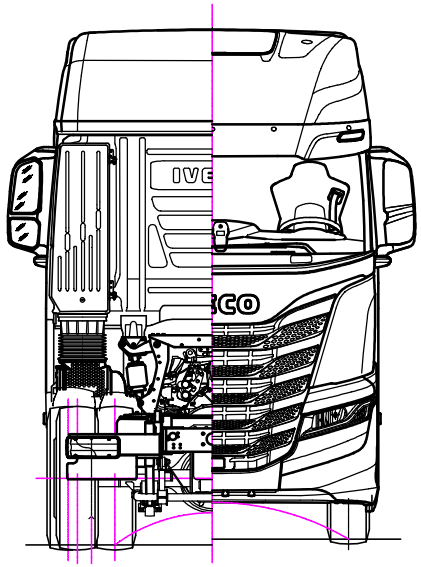

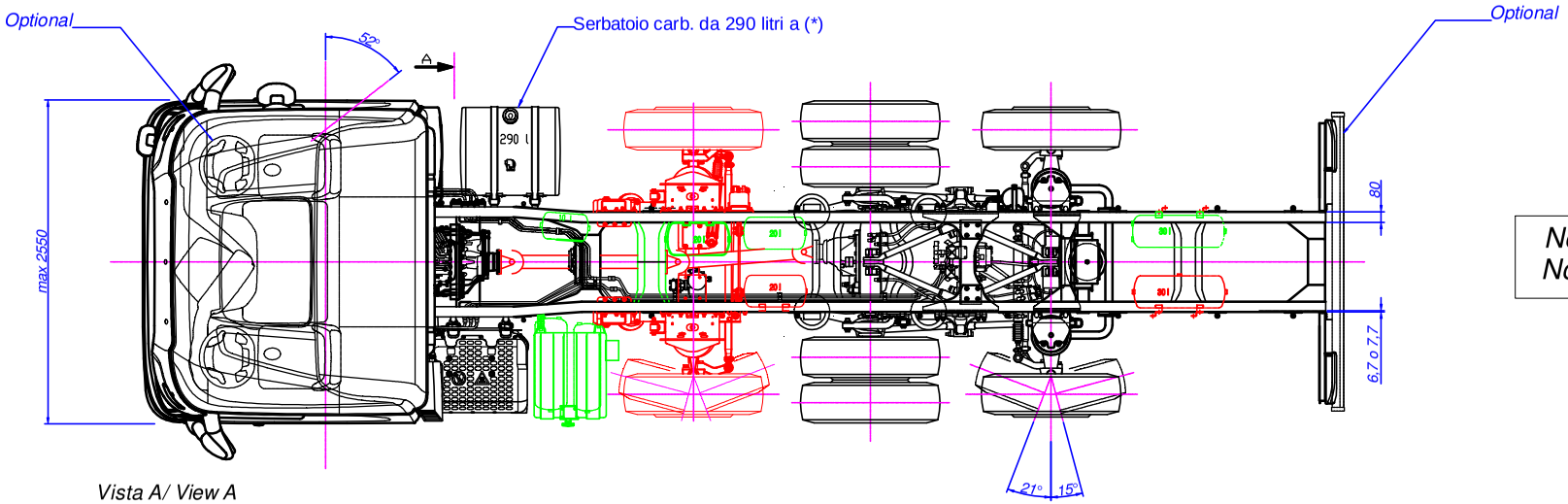

Nota (*): vedere scheda informativa
Note (*): see information document

Vista A/ View A

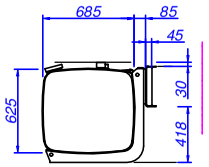

E24*13R11/18*0056*02

Tightening tolerance - ISO4	ISO 2768 - ---- Tolerancing ISO 8015	Author A.TIBALDO	Date 31/01/2020		Scale 1:20
S.T. System Truck S.p.A. Via Paesa, 28 - I-46048 Roverbella (MN) Tel. +39 0376 696809 www.stsystemtruck.com	All proprietary rights reserved by ST System Truck S.p.A. The reproduction, distribution and utilization of this document as well as the communication of its content to others without express authorization prohibited (see ISO 16016:2016).	Description FIGURINO IVECO S-WAY AS260S Y/PS/FS ON CONF. 1+3 - PASSO 4200 MM			
		Code 55.01.03.0163	Drawing 55.01.03.0163	Sheet 1/1	Format A1

Disegno per omologazione
Drawing for type-approval

Varianti/variants	Versioni/versions	A	B
???	??CB?????????????P?? ?	2835	1365
???	??CB?????????????Q?? ?	2880	1320
???	??CB?????????????R?? ?	2790	1410

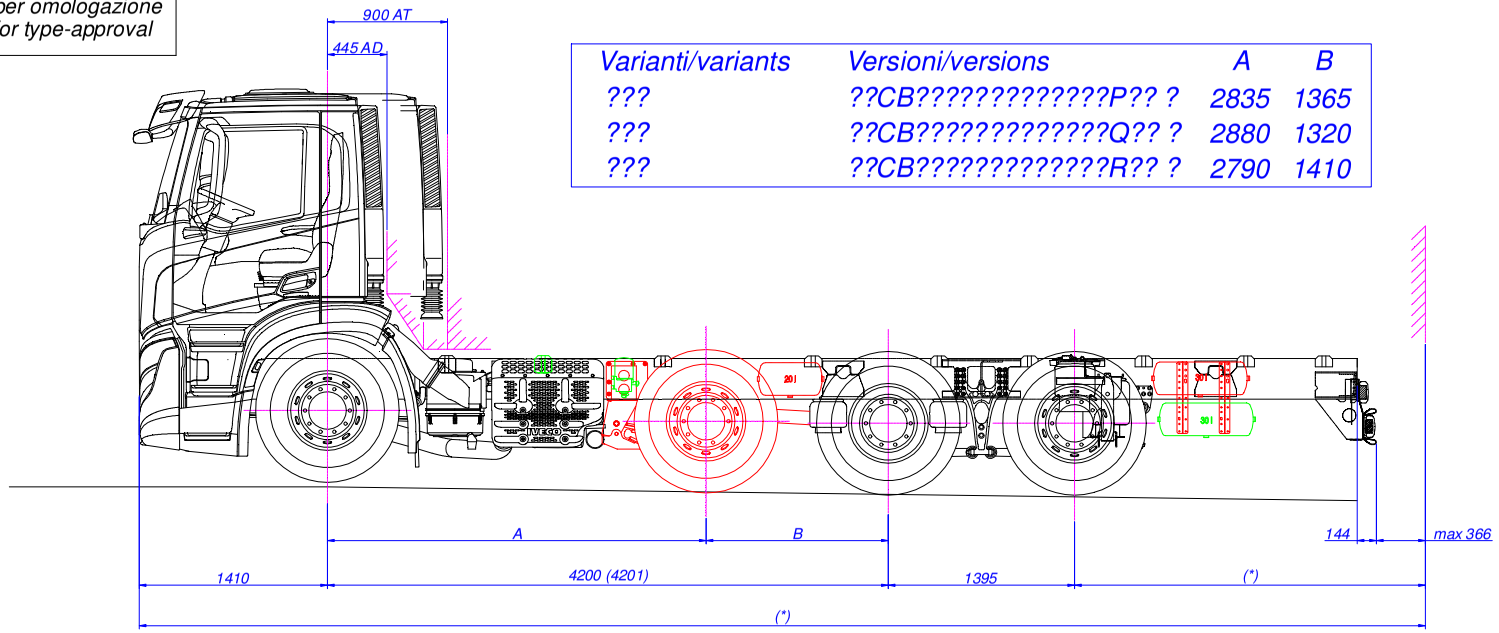

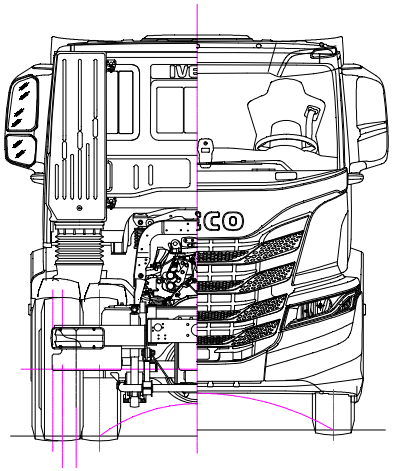

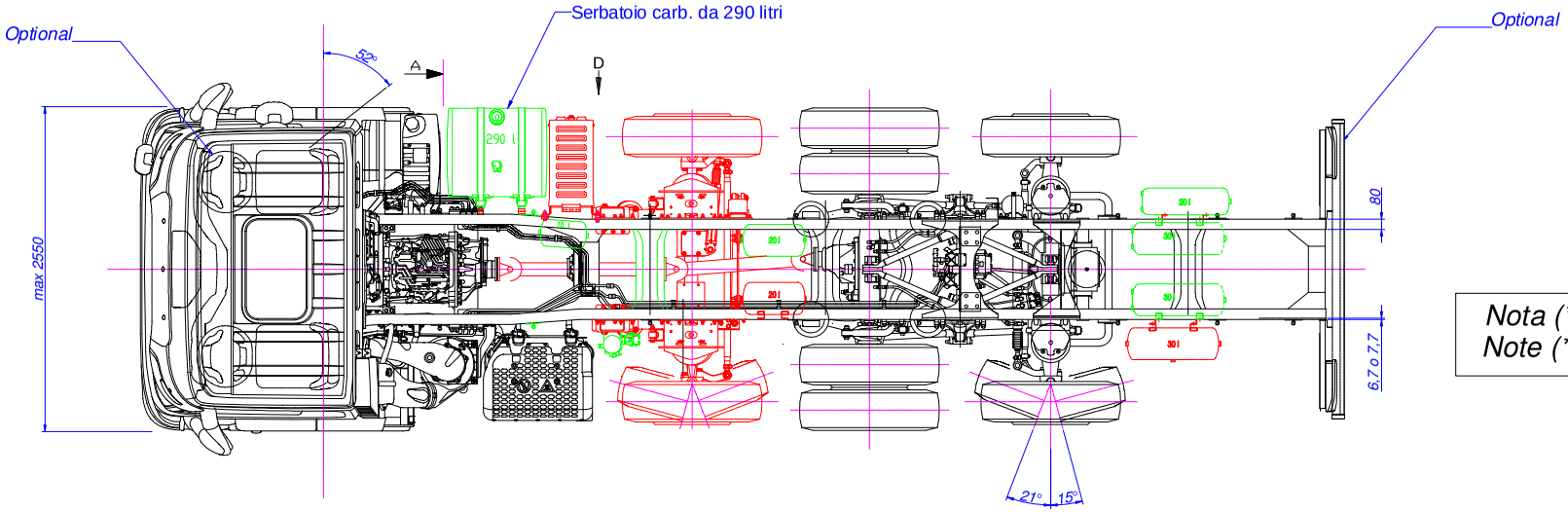

Nota (*): vedere scheda informativa
Note (*): see information document

Vista A/ View A

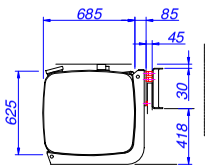

Vista D / View D

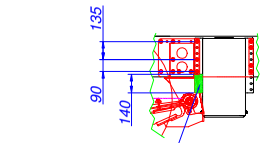

Eliminare ala
per un tratto L=140

E24*13R11/18*0056*02

Tightening tolerance – ISO 4	ISO 2768 – ---- Tolerancing ISO 8015	Author A.TIBALDO	Date 31/01/2020		Scale 1:20
S.T. System Truck S.p.A. via Parisa, 28 – I-46048 Roverbella (MN) – Tel. +39 0376 696809 www.stsystemtruck.com	All proprietary rights reserved by ST System Truck S.p.A. The reproduction, distribution and utilization of this document as well as the communication of its contents to others without express authorization is prohibited (see ISO 16016:2016).	Description FIGURINO IVECO S-WAY AD/AT260S Y/PS/FS ON FILTRO STANDARD – CONF. 1+3 – PASSO 4200 MM			
		Code 55.01.03.0157	Drawing 55.01.03.0157	Sheet 1/2	Format A1

Disegno per omologazione
Drawing for type-approval

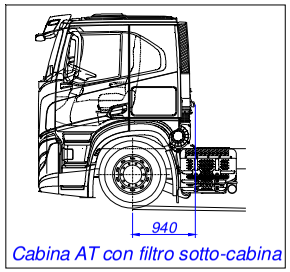

Cabina AT con filtro sotto-cabina

Configurazione valida anche per veicolo con cabina AT e filtro sotto-cabina (vedi dettaglio)

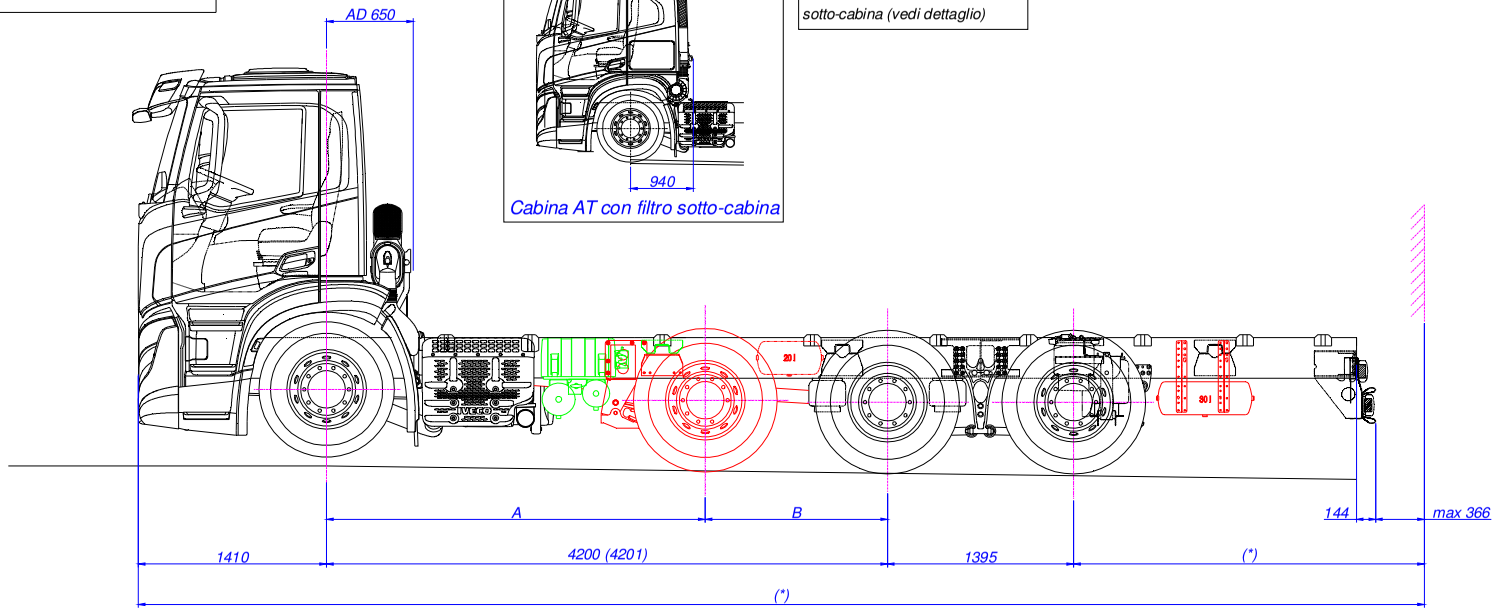

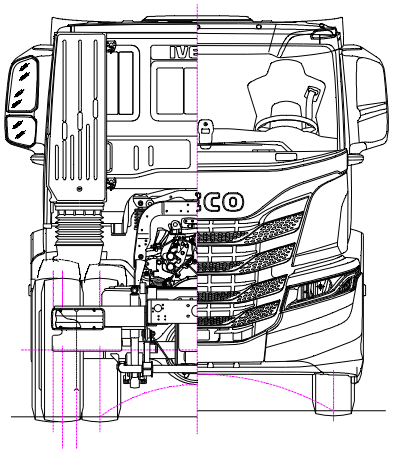

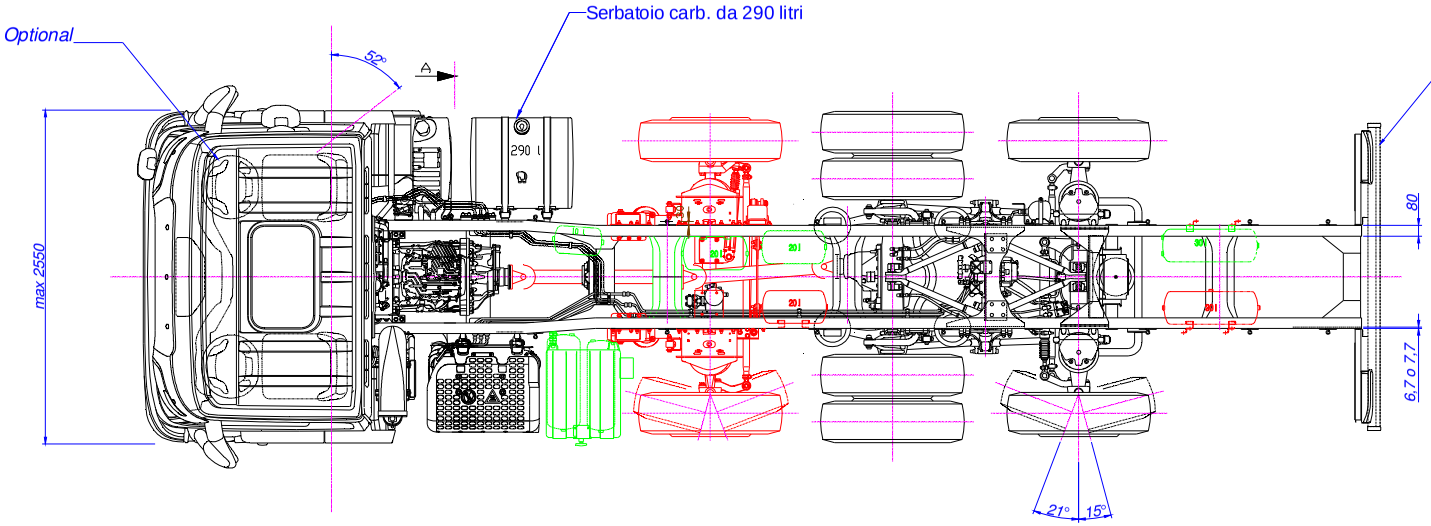

Nota (*): vedere scheda informativa
Note (*): see information document

Vista A/ View A

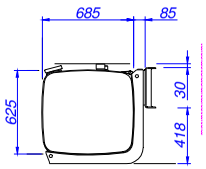

Varianti/variants	*Versioni/versions*	*A*	*B*
???	*??CB?????????????P?? ?*	*2835*	*1365*
???	*??CB?????????????Q?? ?*	*2880*	*1320*
???	*??CB?????????????R?? ?*	*2790*	*1410*

Tightening tolerance – ISO4	ISO 2768 – ---- Tolerancing ISO 8015	Author: A.TIBALDO	Date: 31/01/2020	Scale: 1:20
S.T. System Truck S.p.A. via Parisa, 28 – I-46048 Roverbella (MN) – tel. +39 0376 696809 – www.stsystemtruck.com	All proprietary rights reserved by ST System Truck S.p.A. The reproduction, distribution and utilization of this document as well as the communication of its contents to others without express authorization is prohibited (see ISO 16016:2016).	Description: FIGURINO IVECO S-WAY AD/AT260S Y/PS/FS ON – FILTRO COMPATTO SOTTO-CABINA – CONF. 1+3 – PASSO 4200 MM		
		Code: 55.01.03.0157	Drawing: 55.01.03.0157	Sheet: 2/2 – Format: A1

E24*13R11/18*0056*02

Disegno per omologazione
Drawing for type-approval

Varianti/variants	Versioni/versions	A	B
2?S	??DB?????????????P?? ?	3135	1365
2?S	??DB?????????????Q?? ?	3180	1320
2?S	??DB?????????????R?? ?	3090	1410

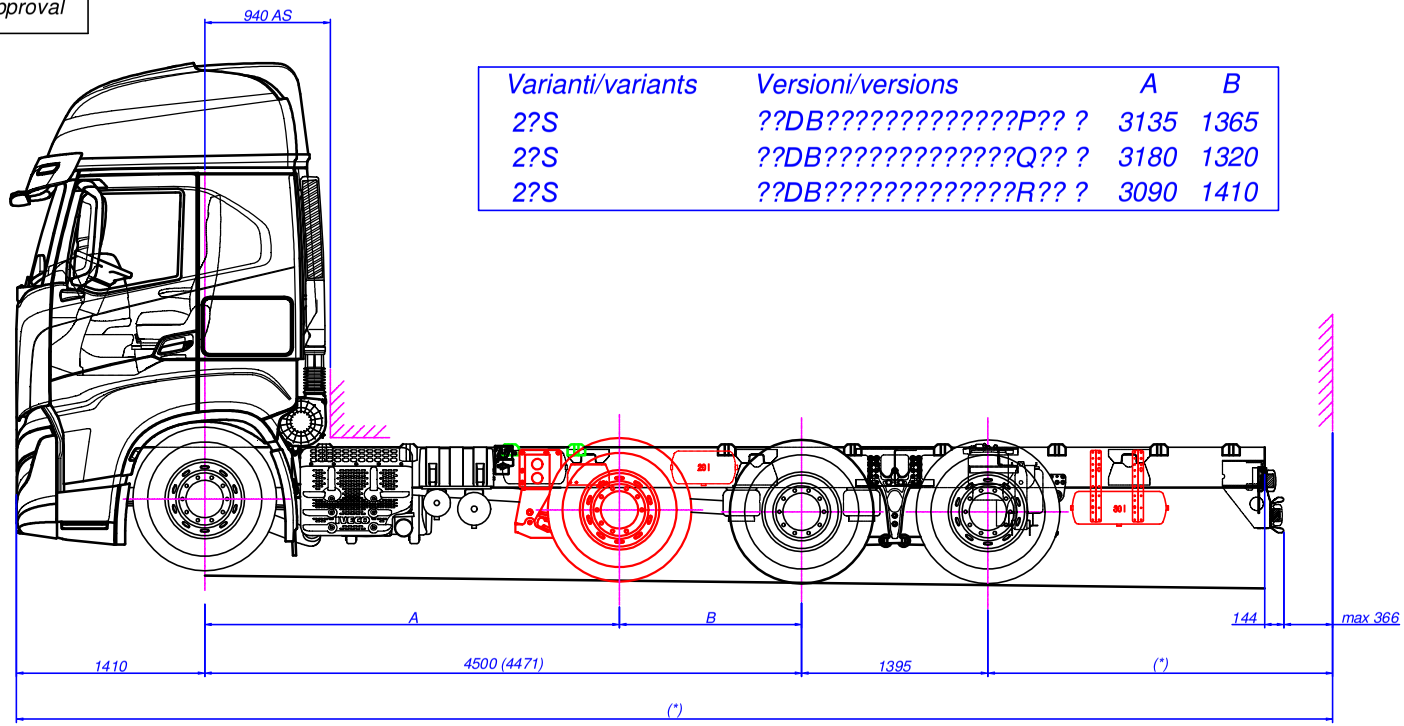

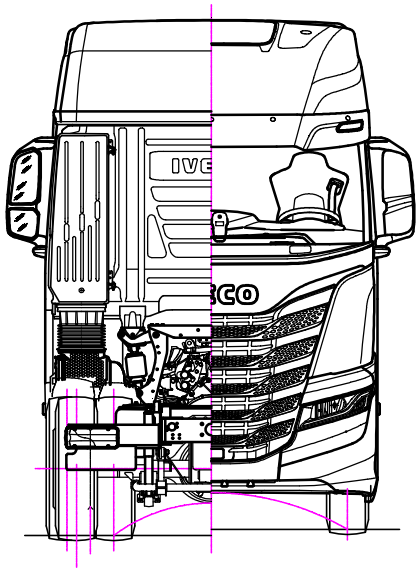

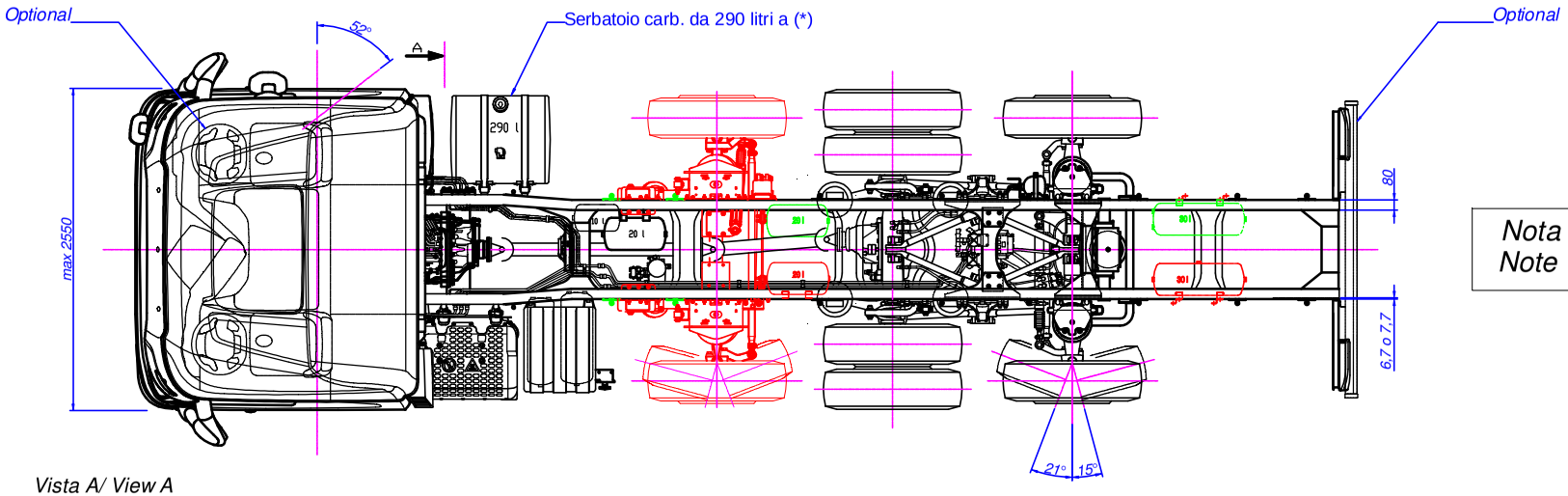

Nota (*): vedere scheda informativa
Note (*): see information document

Vista A/ View A

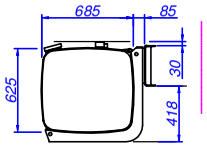

Tightening tolerance – ISO4	ISO 2768 – ---- Tolerancing ISO 8015	Author: A.TIBALDO	Date: 31/01/2020		Scale: 1:20
S.T. System Truck S.p.A. Via Parsa, 28 – I-46048 Roverbella (MN) Tel. +39 0376 696809 www.stsystemtruck.com	All proprietary rights reserved by ST System Truck S.p.A. The reproduction, distribution and utilization of this document as well as the communication of its contents to others without express authorization is prohibited (see ISO 16016:2016).	Description: FIGURINO IVECO S-WAY AS260S Y/PS/FS ON CONF. 1+3 – PASSO 4500 MM			
		Code: 55.01.03.0164	Drawing: 55.01.03.0164	Sheet: 1/1	Format: A1

E24*13R11/18*0056*02

Disegno per omologazione
Drawing for type-approval

Varianti/variants	Versioni/versions	A	B
???	??CB?????????????P?? ?	3135	1365
???	??CB?????????????Q?? ?	3180	1320
???	??CB?????????????R?? ?	3090	1410

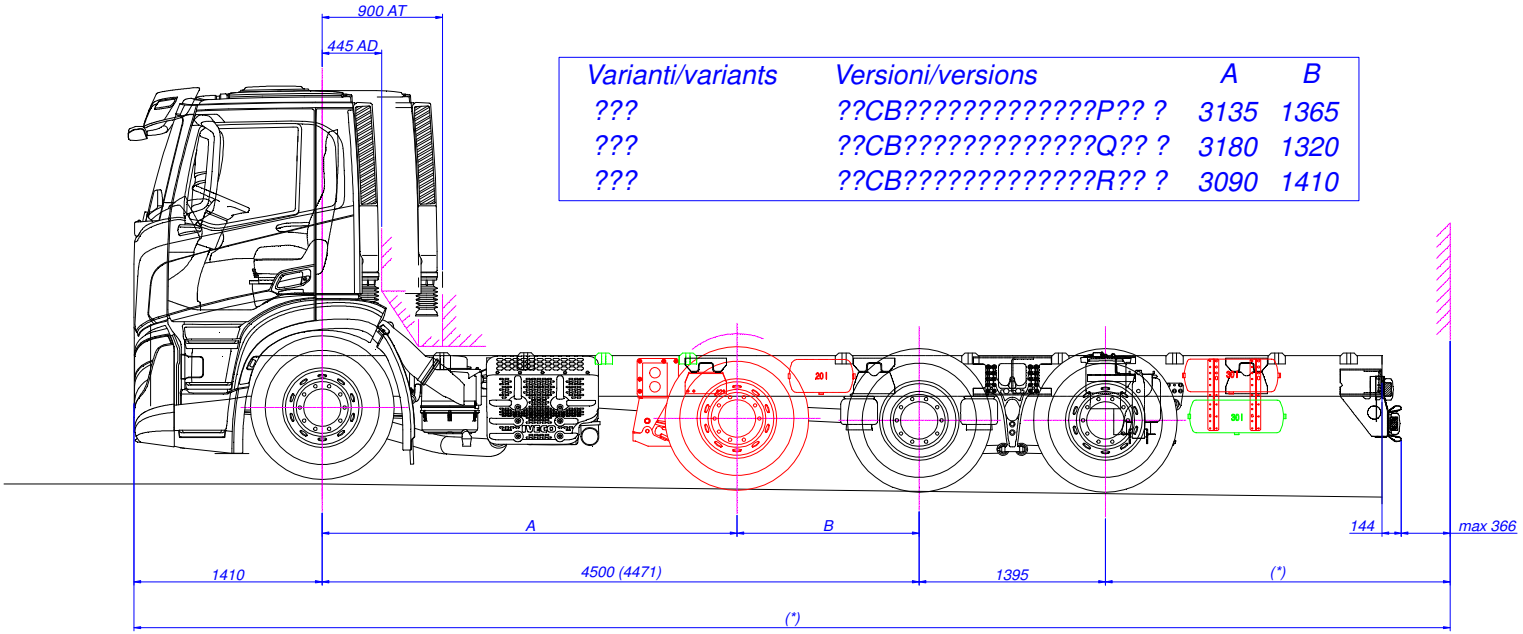

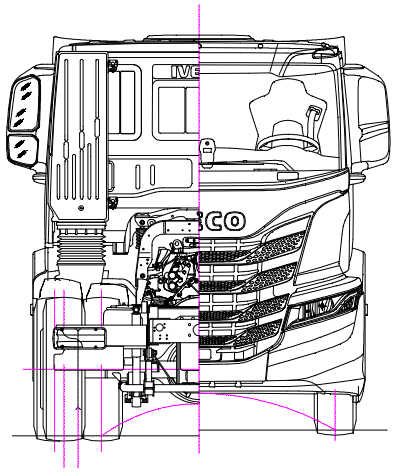

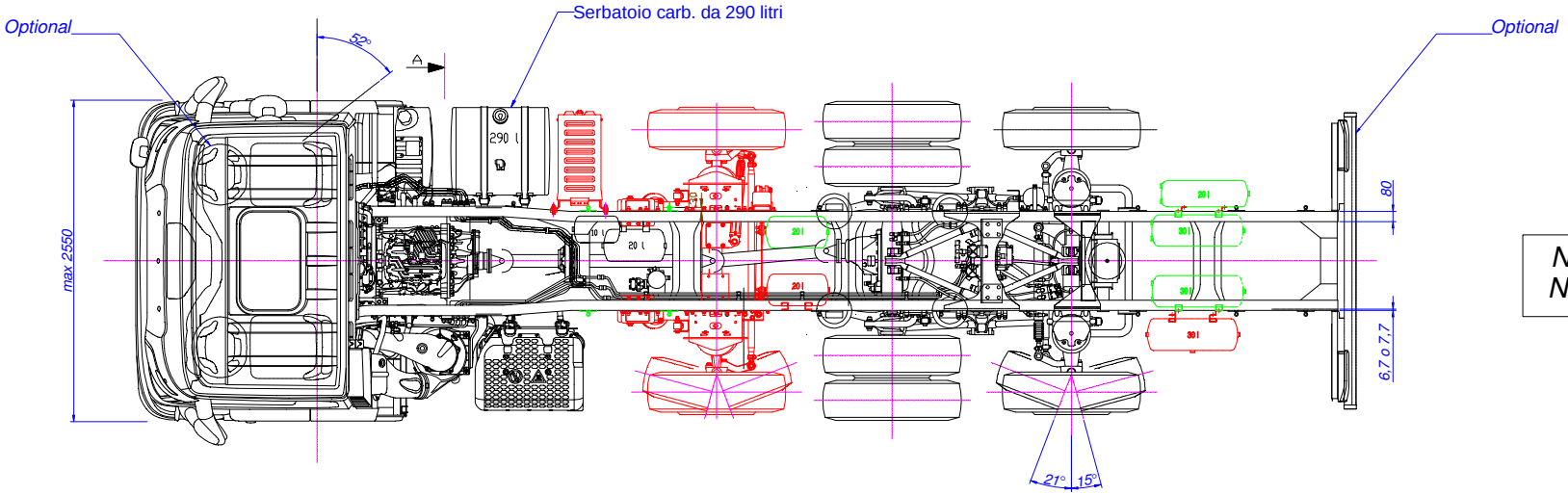

Nota (*): vedere scheda informativa
Note (*): see information document

Vista A/ View A

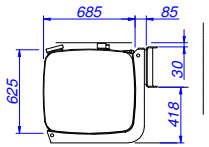

Tightening tolerance - ISO4	ISO 2768 - ---- Tolerancing ISO 8015	Author A. TIBALDO	Date 31/01/2020	Scale 1:20
S.T. System Truck S.p.A. via Piave, 28 - I 46048 Roverbella (MN) Tel. +39 0376 696806 www.stsystemtruck.com	All proprietary rights reserved by S.T. System Truck S.p.A. The reproduction, distribution and utilisation of this document as well as the communication of its contents to others without express authorisation is prohibited (see ISO 16016:2016)	Description FIGURINO IVECO S-WAY AD/AT260S Y/PS/FS ON FILTRO STANDARD - CONF. 1+3 - PASSO 4500 MM		
		Code 55.01.03.0158	Drawing 55.01.03.0158	Sheet 1/2 Format A1

E24*13R11/18*0056*02

Disegno per omologazione
Drawing for type-approval

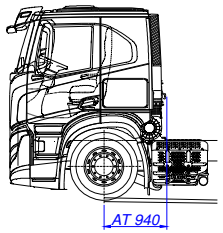

Cabina AT con filtro sotto-cabina

Configurazione valida anche per veicolo con cabina AT e filtro sotto-cabina (vedi dettaglio)

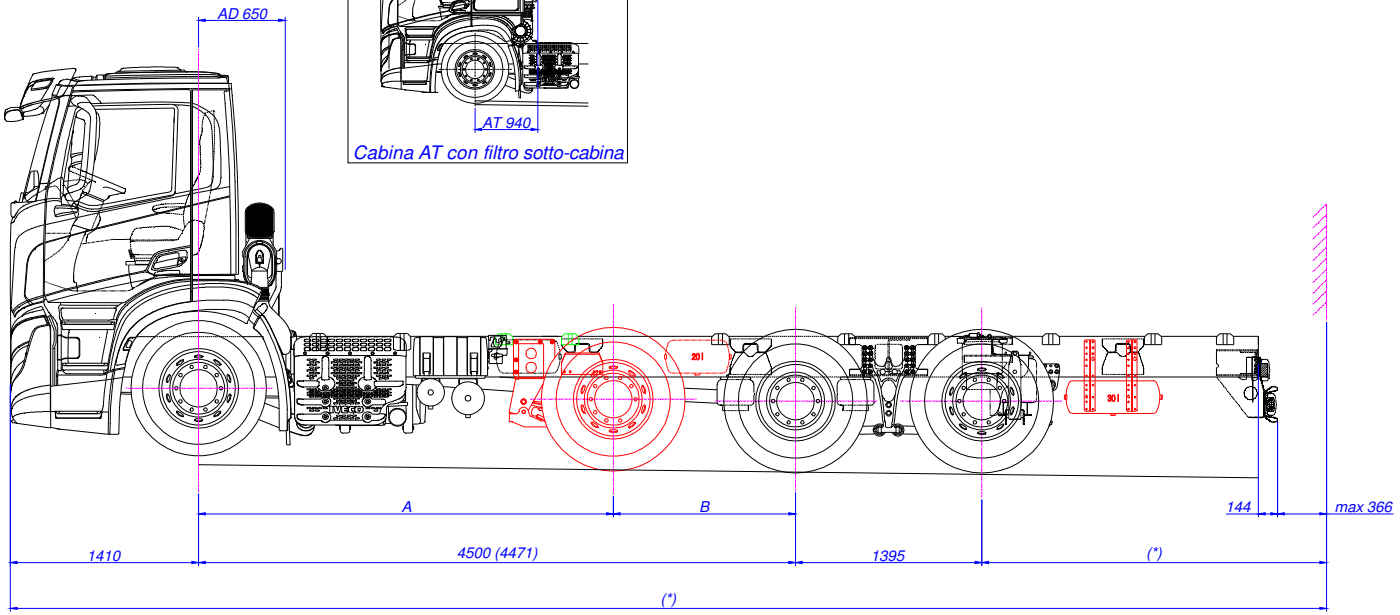

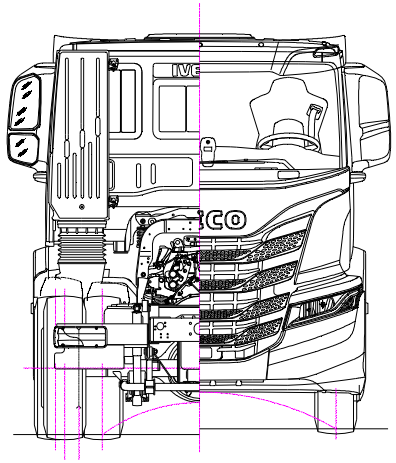

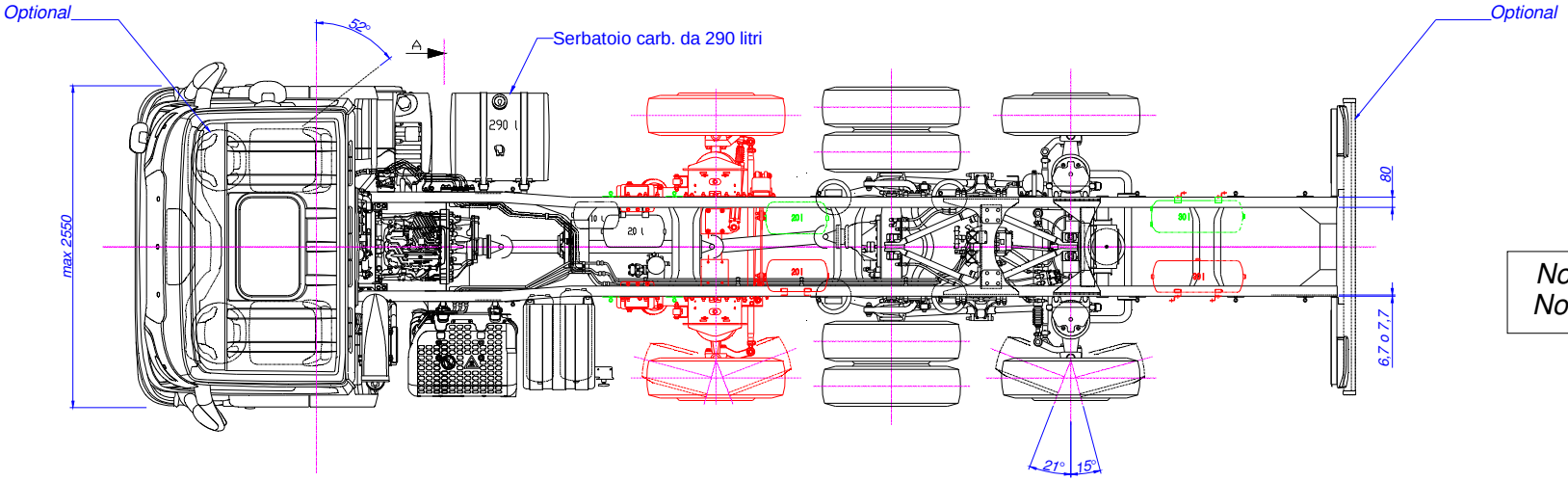

Nota (*): vedere scheda informativa
Note (*): see information document

Vista A/ View A

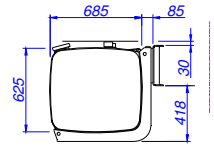

Varianti/variants	Versioni/versions	A	B
???	??CB?????????????P?? ?	3135	1365
???	??CB?????????????Q?? ?	3180	1320
???	??CB?????????????R?? ?	3090	1410

Tightening tolerance - 1004	ISO 2768 - ---- Tolerancing ISO 8015	Author A. TIBALDO	Date 31/01/2020	Scale 1:20
S.T. System Truck S.p.A. via Piave, 28 - I-46048 Roverbella (MN) Tel. +39 0376 696008 www.stsystemtruck.com	All proprietary rights reserved by S.T. System Truck S.p.A. The reproduction, distribution and utilization of this document as well as the communication of its contents to others without express authorization is prohibited (see ISO 16016:2016)	Description FIGURINO IVECO S-WAY AD/AT260S Y/PS/FS ON - FILTRO COMPATTO O SOTTOCABINA - CONF. 1+3 - PASSO 4500 MM		
		Code 55.01.03.0158	Drawing 55.01.03.0158	Sheet 2/2 Format A1

E24*13R11/18*0056*02

Disegno per omologazione
Drawing for type-approval

Varianti/variants	Versioni/versions	A	B
2?S	??EB?????????????P?? ?	3435	1365
2?S	??EB?????????????Q?? ?	3480	1320
2?S	??EB?????????????R?? ?	3390	1410

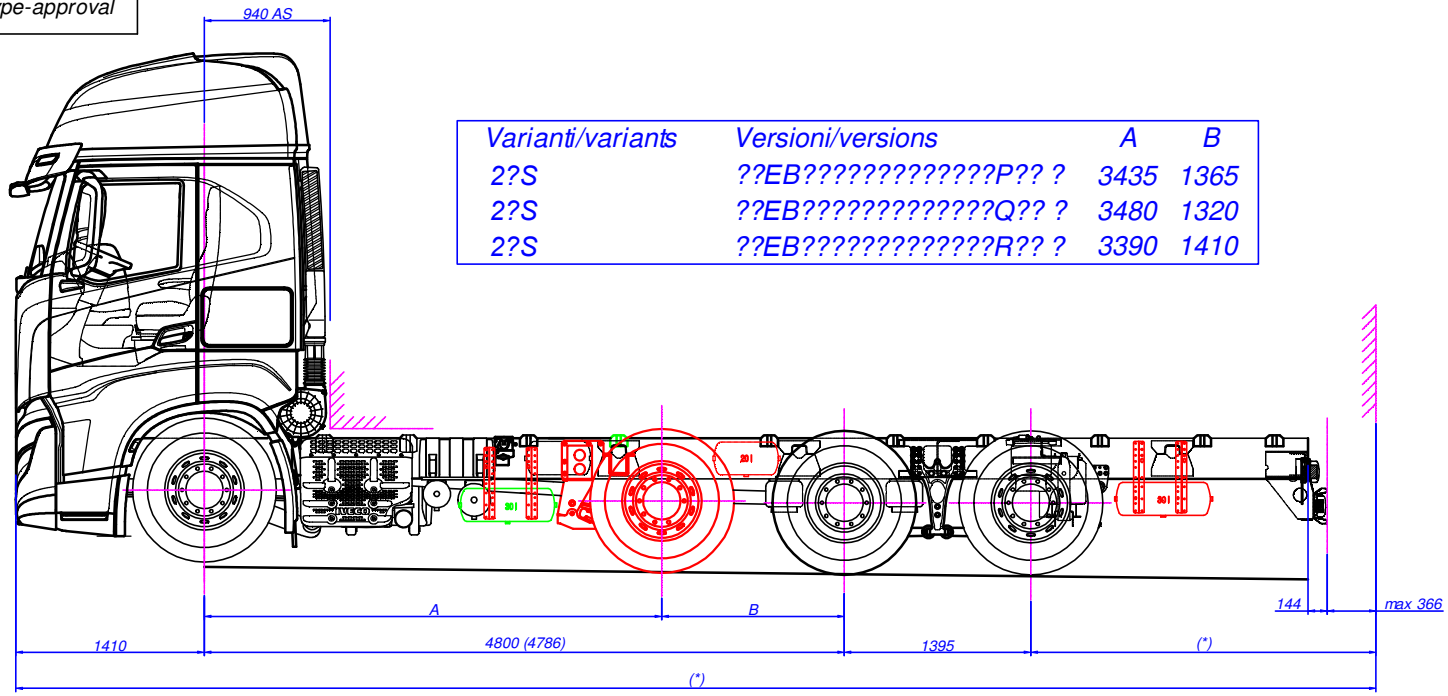

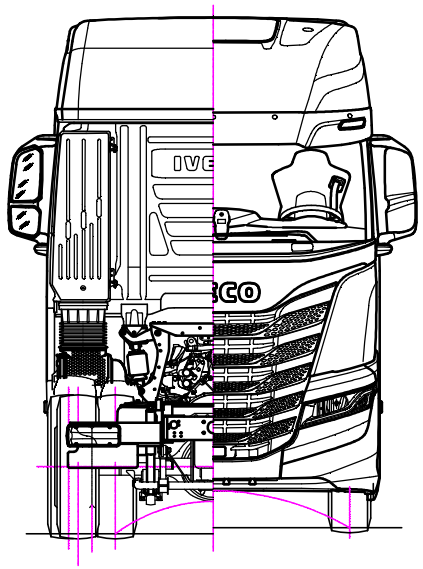

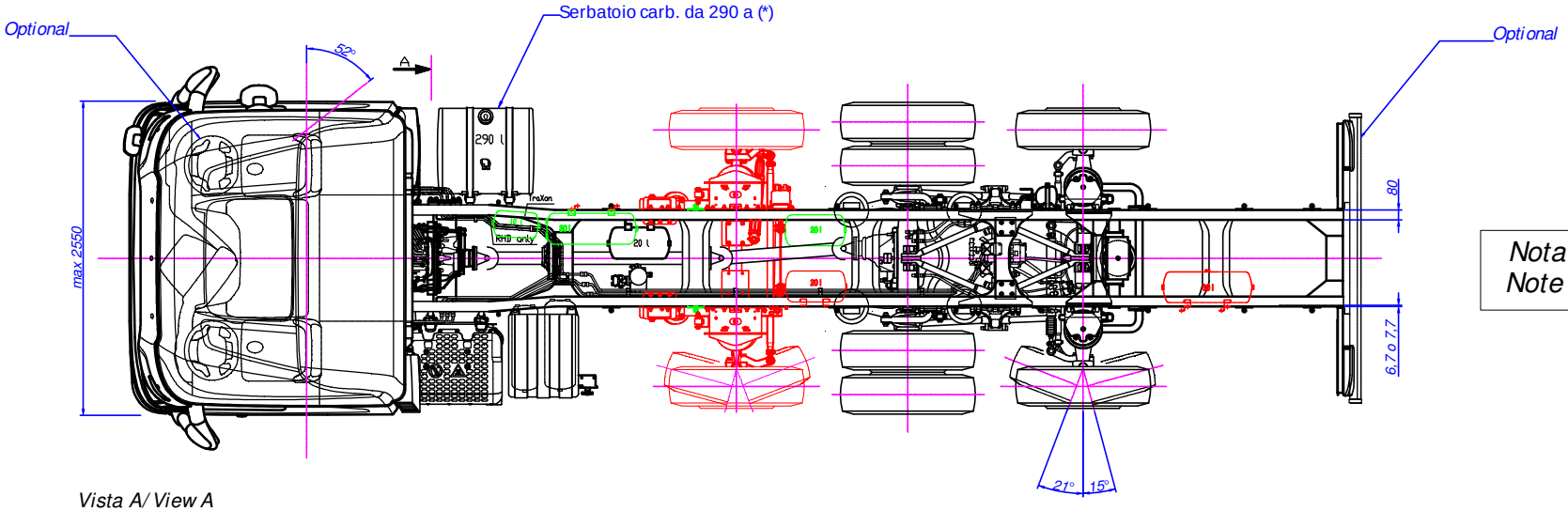

Nota (*): vedere scheda informativa
Note (*): see information document

Vista A/ View A

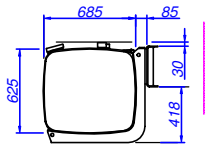

Tightening tolerance – 1004	ISO 2768 – ----- Tolerancing ISO 8015	Author A.TIBALDO	Date 31/01/2020	Scale 1:20
essebi S.T. System Truck S.p.A. via Parisa, 8 – I-46049 Rosetta (MN) tel. +39 0376 686809 www.stsystemtruck.com	All proprietary rights reserved by S.T. System Truck S.p.A. The reproduction, distribution and utilisation of this document as well as the communication of its content to others without express authorisation is prohibited law (D.D. 1609.2016)	Description FIGURINO IVECO S-WAY AS260S Y/PS/FS ON CONF. 13 – PASSO 4800 MM		
		Code 55.0103.0165	Drawing 55.0103.0165	Sheet 1/2 Format A1

E24*13R11/18*0056*02

Disegno per omologazione
Drawing for type-approval

Varianti/variants	Versioni/versions	A	B
???	??CB?????????????P?? ?	3435	1365
???	??CB?????????????Q?? ?	3480	1320
???	??CB?????????????R?? ?	3390	1410

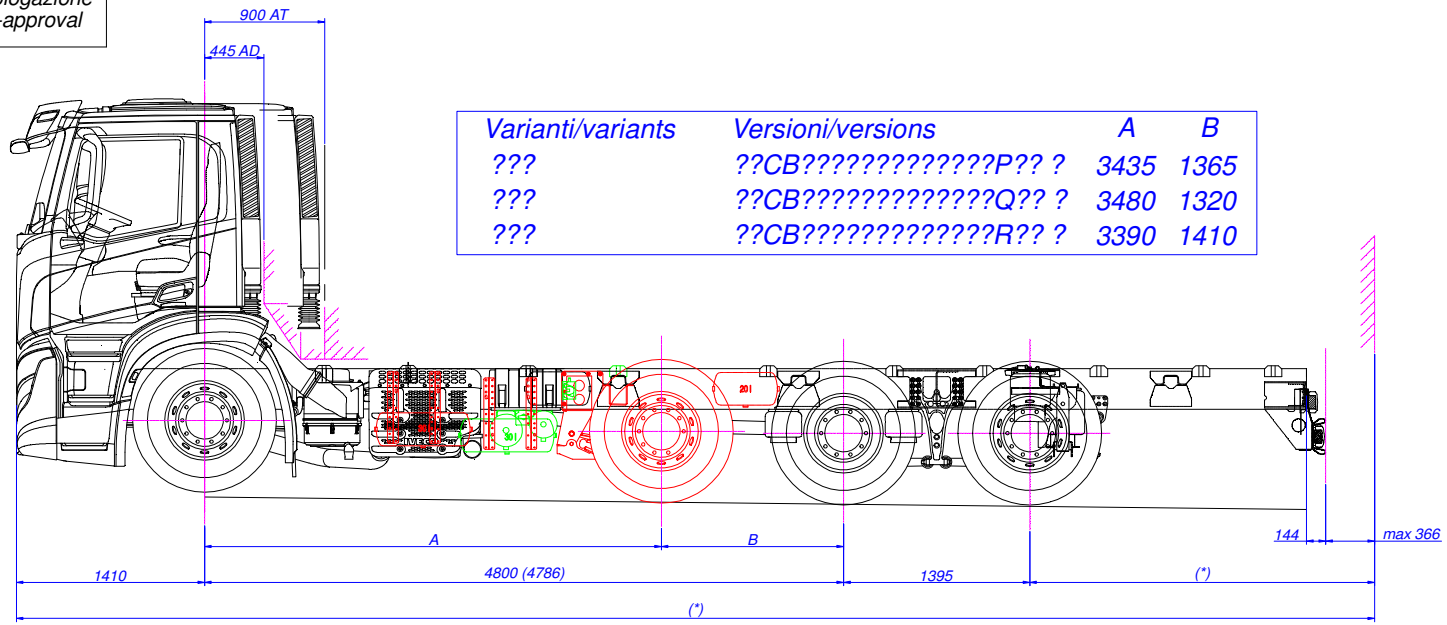

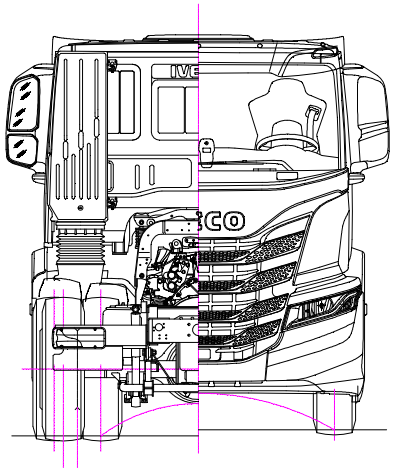

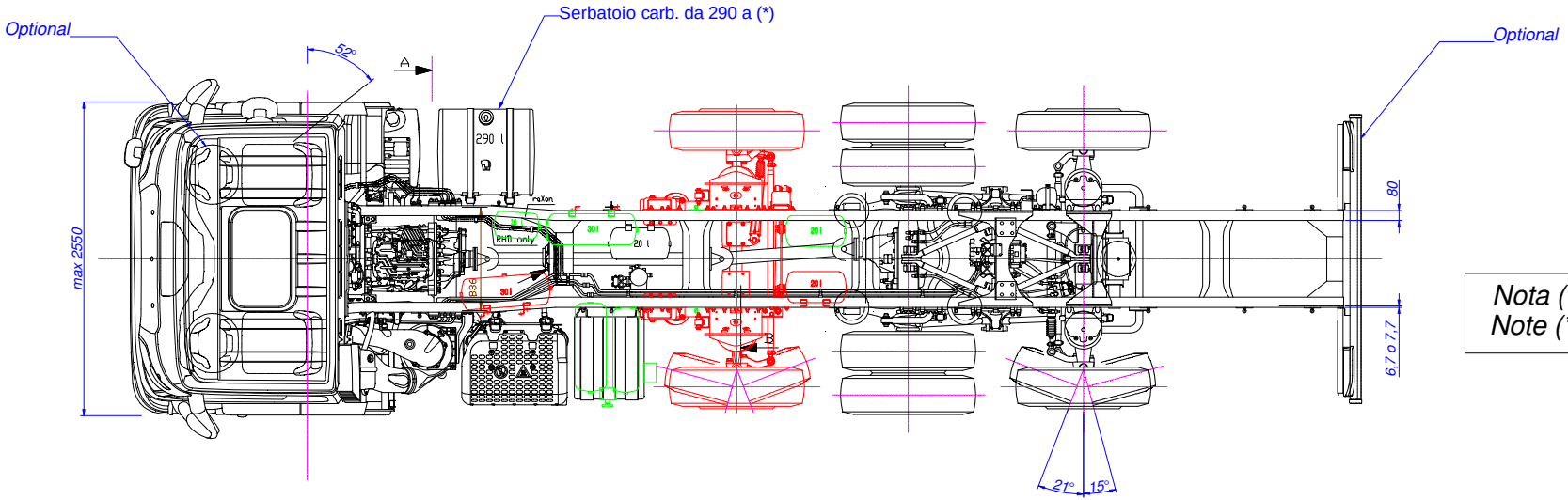

Nota (*): vedere scheda informativa
Note (*): see information document

Vista A/ View A

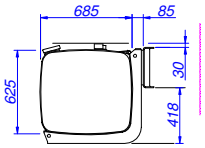

Tightening tolerance - 1004	ISO 2768 - ---- Tolerancing ISO 8015	Author A. TIBALDO	Date 31/01/2020		Scale 1:20
S.T. System Truck S.p.A. via Piave, 28 - I 46048 Roverbella (MN) Tel. +39 0376 696696 www.stsystemtruck.com	All proprietary rights reserved by S.T. System Truck S.p.A. The reproduction, distribution and utilisation of this document as well as the communication of its contents to others without express authorisation is prohibited (see ISO 16016:2016)	Description FIGURINO IVECO S-WAY AD/AT260S Y/PS/FS ON FILTRO STANDARD - CONF. 1+3 - PASSO 4800 MM			
		Code 55.01.03.0159	Drawing 55.01.03.0159	Sheet 1/2	Format A1

E24*13R11/18*0056*02

Disegno per omologazione
Drawing for type-approval

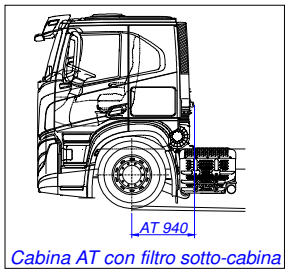

Cabina AT con filtro sotto-cabina

Configurazione valida anche per veicolo con cabina AT e filtro sotto-cabina (vedi dettaglio)

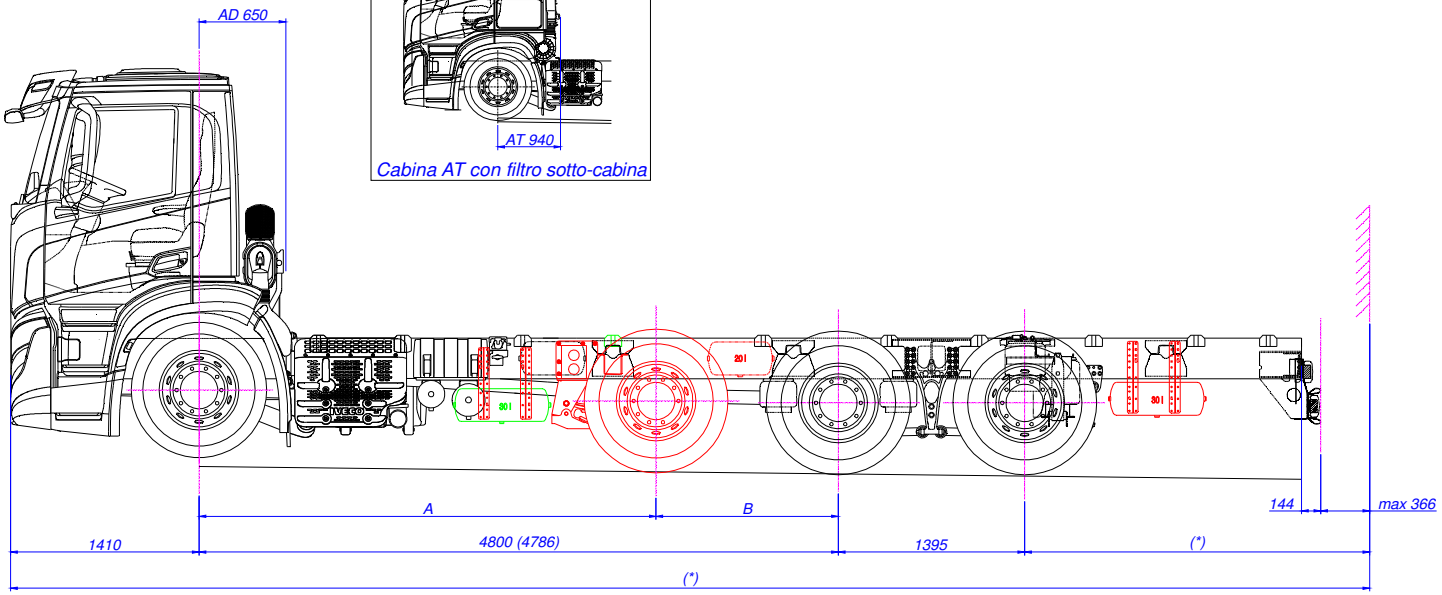

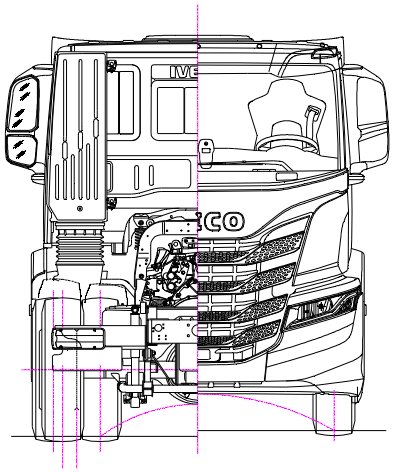

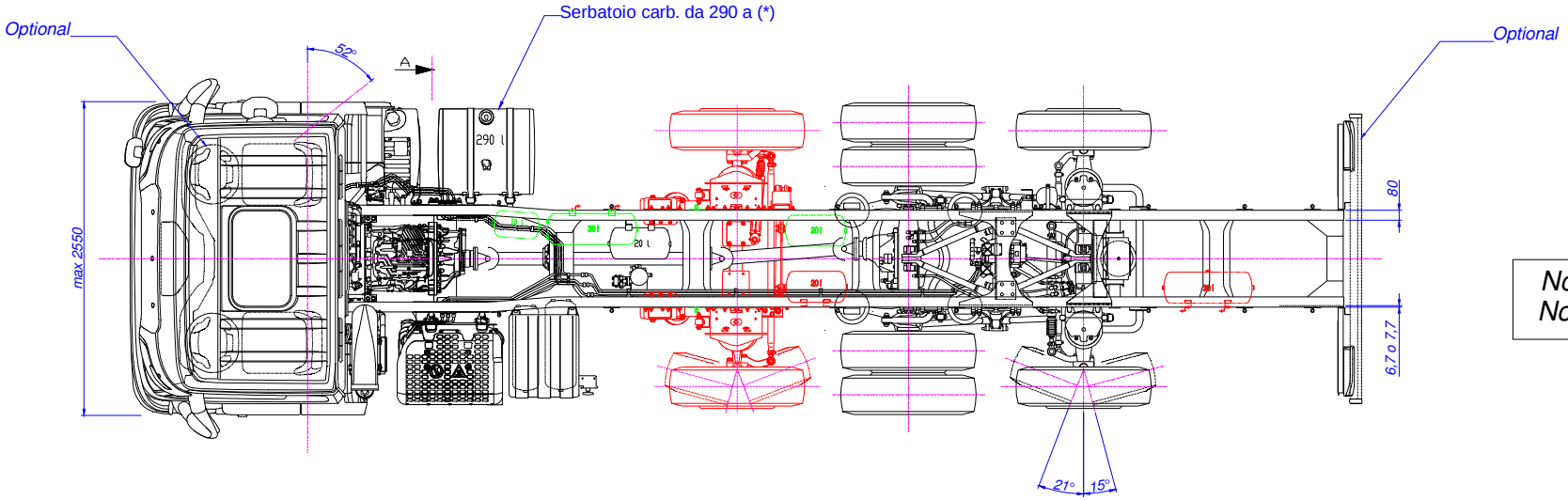

Nota (*): vedere scheda informativa
Note (*): see information document

Vista A/ View A

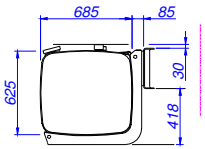

Varianti/variants	*Versioni/versions*	*A*	*B*
???	*??CB?????????????P?? ?*	*3435*	*1365*
???	*??CB?????????????Q?? ?*	*3480*	*1320*
???	*??CB?????????????R?? ?*	*3390*	*1410*

Tightening tolerance – ISO4	ISO 2768 - ---- Tolerancing ISO 8015	Author: A. TIBALDO	Date: 31/01/2020	Scale: 1:20
S.T. System Truck S.p.A. via Piave, 28 - I 46048 Roverbella (MN) Tel. +39 0376 696809 www.stsystemtruck.com	All proprietary rights reserved by S.T. System Truck S.p.A. The reproduction, distribution and utilization of this document as well as the communication of its contents to others without express authorization is prohibited (see ISO 16016:2016)	Description: FIGURINO IVECO S-WAY AD/AT260S Y/PS/FS ON - FILTRO COMPATTO O SOTTO-CABINA - CONF. 1+3 - PASSO 4800 MM		
		Code: 55.01.03.0159	Drawing: 55.01.03.0159	Sheet: 2/2 Format: A1

E24*13R11/18*0056*02

Disegno per omologazione
Drawing for type-approval

Varianti/variants	Versioni/versions	A	B
2?S	??FB?????????????P?? ?	3735	1365
2?S	??FB?????????????Q?? ?	3780	1320
2?S	??FB?????????????R?? ?	3690	1410

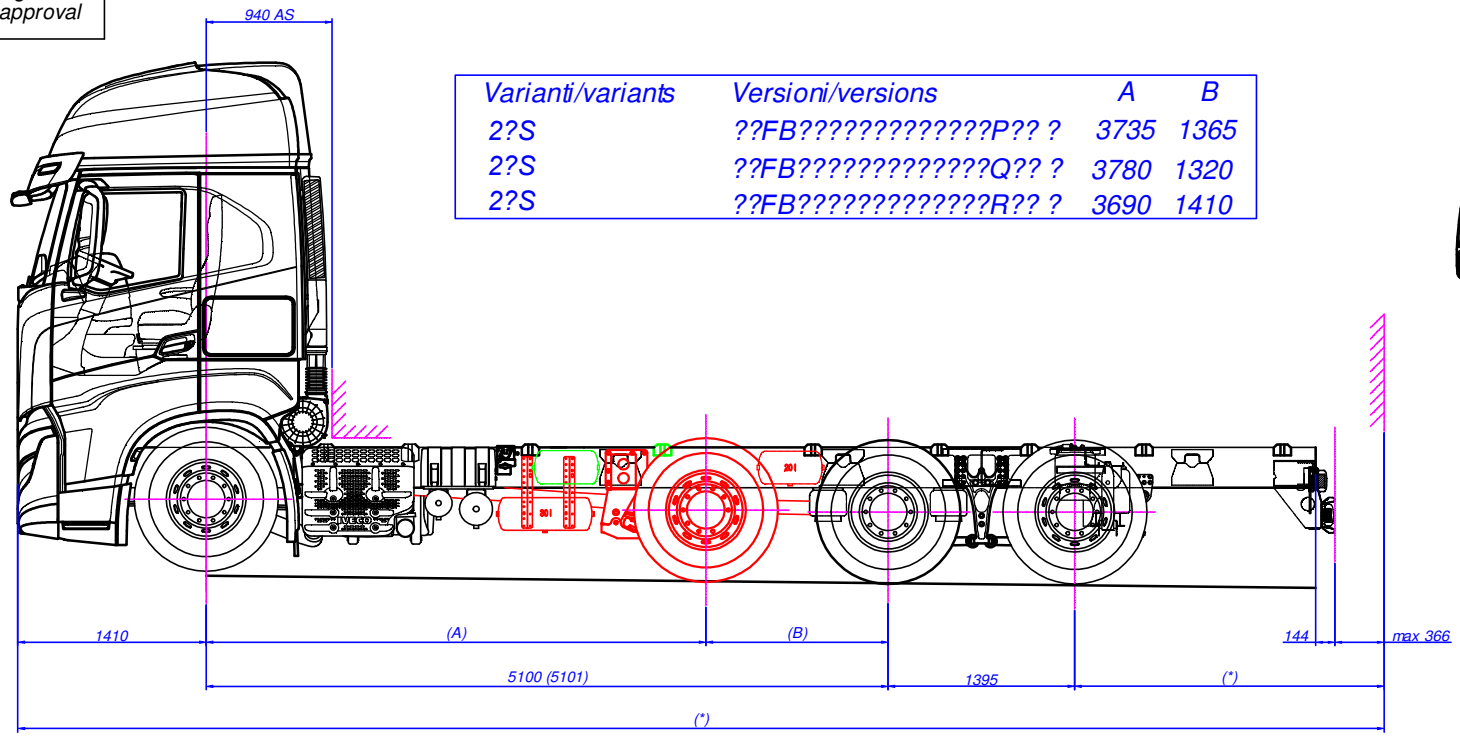

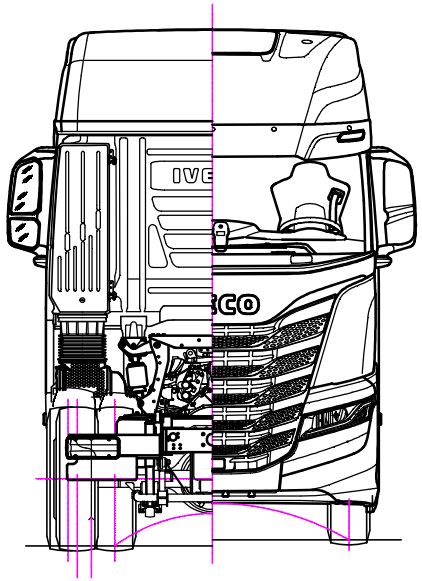

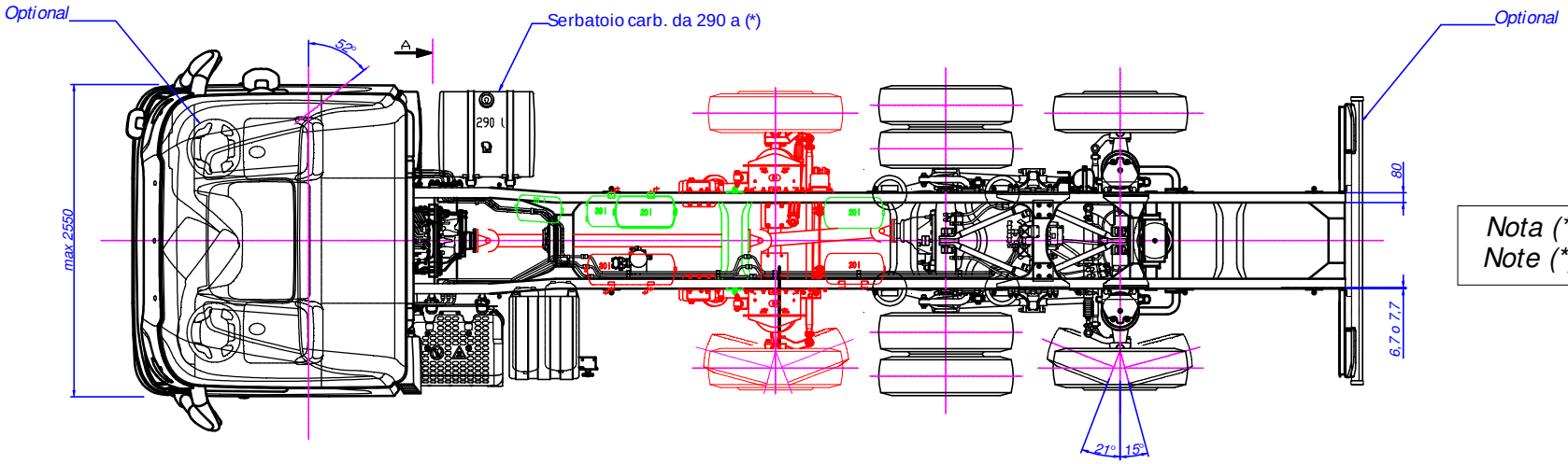

Nota (*): vedere scheda informativa
Note (*): see information document

Vista A/ View A

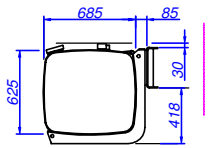

Tightening tolerance – ISO4	ISO 2768 – ----- Tolerancing ISO8015	Author A.TIBALDO	Date 31/01/2020		Scale 1:20
essetti S.T. System Truck S.p.A. via Parisi, 8 – I-46049 Rivarbella (MN) tel. +39 0376 686809 www.stsystemtruck.com	All proprietary rights reserved by S.T. System Truck S.p.A. The reproduction, distribution and utilisation of this document as well as the communication of its content to others without express authorisation is prohibited law (D.L. 1605/2196)	Description FIGURINO IVECO S-WAY AS260S Y/PS/FS ON CONF. 1-3 – PASSO 5100 MM			
		Code 55.0103.0166	Drawing 55.0103.0166	Sheet 1/1	Format A1

E24*13R11/18*0056*02

Disegno per omologazione
Drawing for type-approval

Varianti/variants	Versioni/versions	A	B
???	??CB?????????????P?? ?	3735	1365
???	??CB?????????????Q?? ?	3780	1320
???	??CB?????????????R?? ?	3690	1410

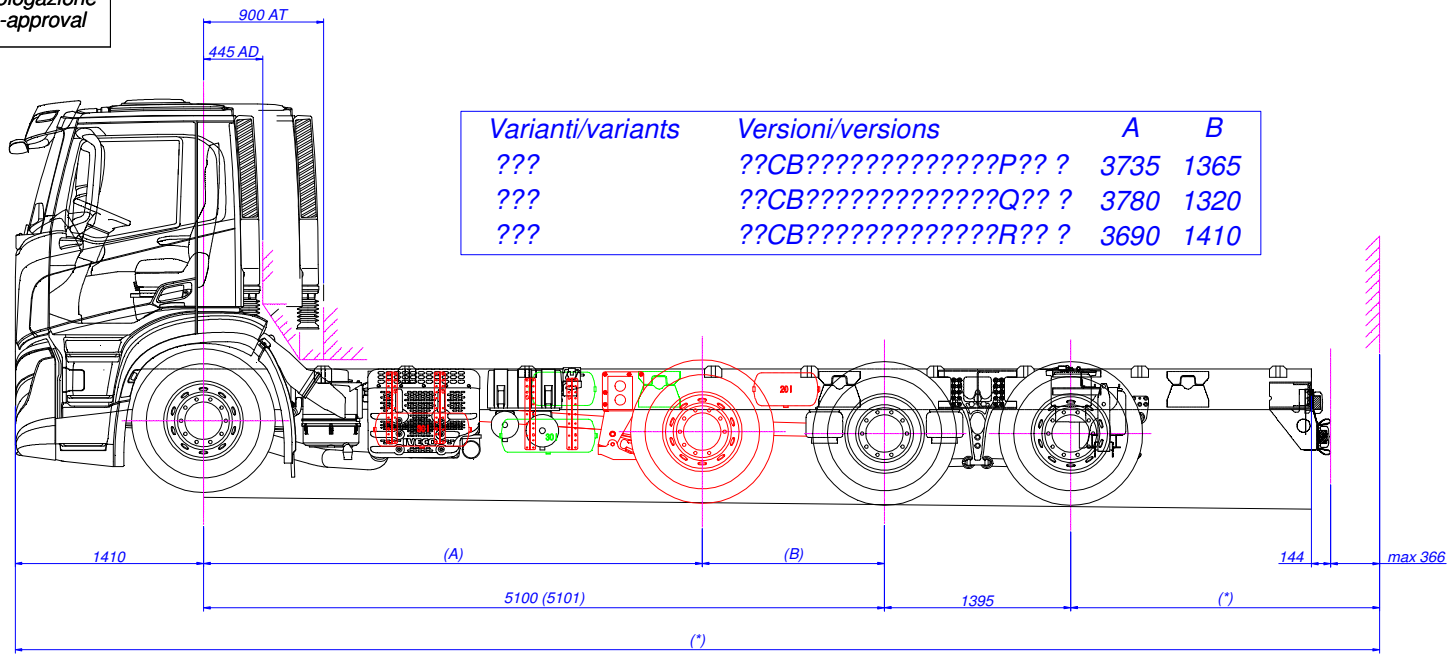

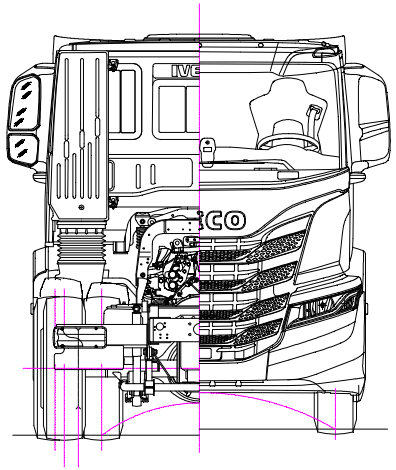

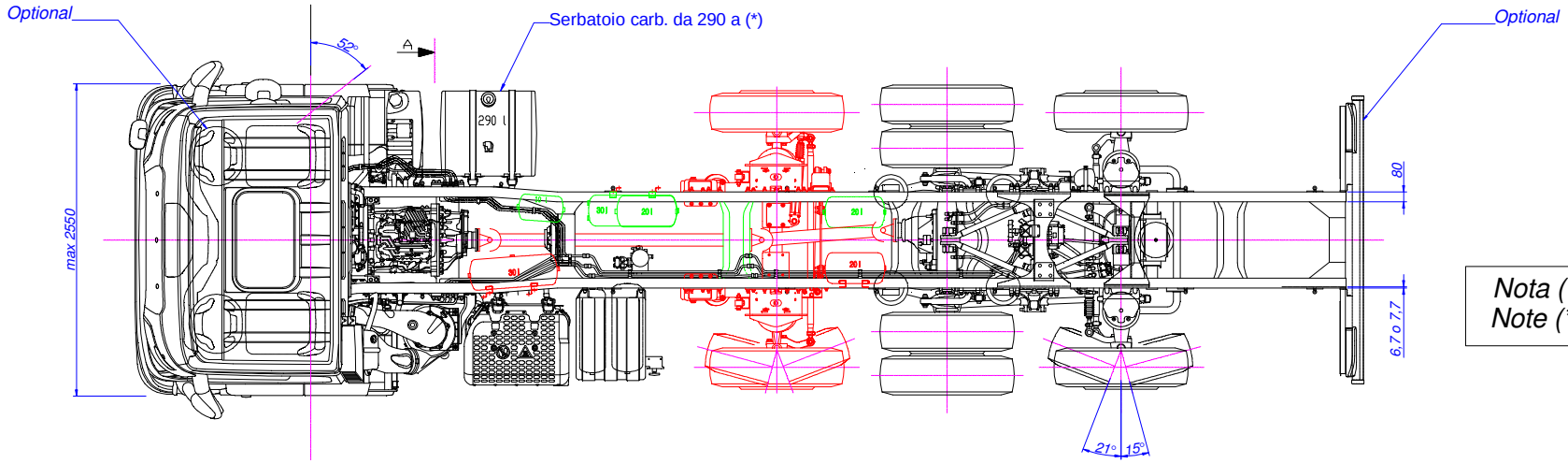

Nota (*): vedere scheda informativa
Note (*): see information document

Vista A/ View A

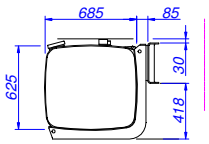

Tightening tolerance – 1004	ISO 2768 – ---- Tolerancing ISO 8015	Author A. TIBALDO	Date 31/01/2020	Scale 1:20
S.T. System Truck S.p.A. via Piave, 28 – I-46048 Roverbella (MN) Tel. +39 0376 696006 www.stsystemtruck.com	All proprietary rights reserved by S.T. System Truck S.p.A. The reproduction, distribution and utilisation of this document as well as the communication of its contents to others without express authorisation is prohibited (see ISO 16016:2016)	Description FIGURINO IVECO S-WAY AD/AT260S Y/PS/FS ON FILTRO STANDARD – CONF. 1+3 – PASSO 5100 MM		
		Code 55.01.03.0160	Drawing 55.01.03.0160	Sheet 1/2 Format A1

E24*13R11/18*0056*02

Disegno per omologazione
Drawing for type-approval

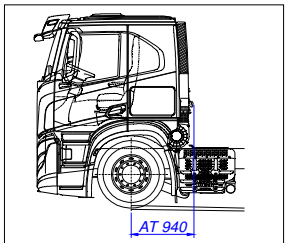

Cabina AT con filtro sotto-cabina

Configurazione valida anche per veicolo con cabina AT e filtro sotto-cabina (vedi dettaglio)

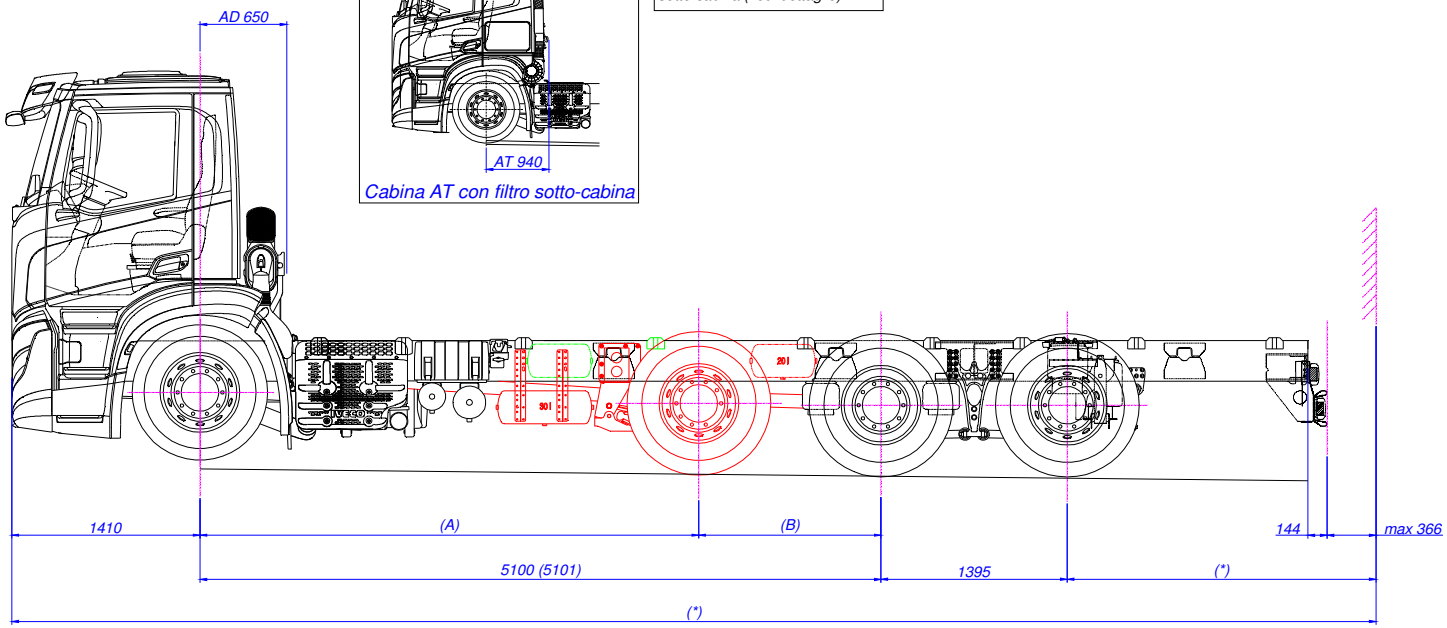

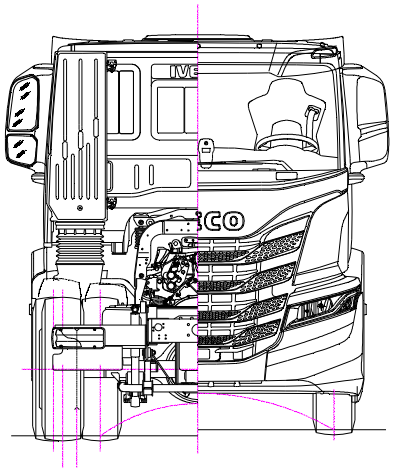

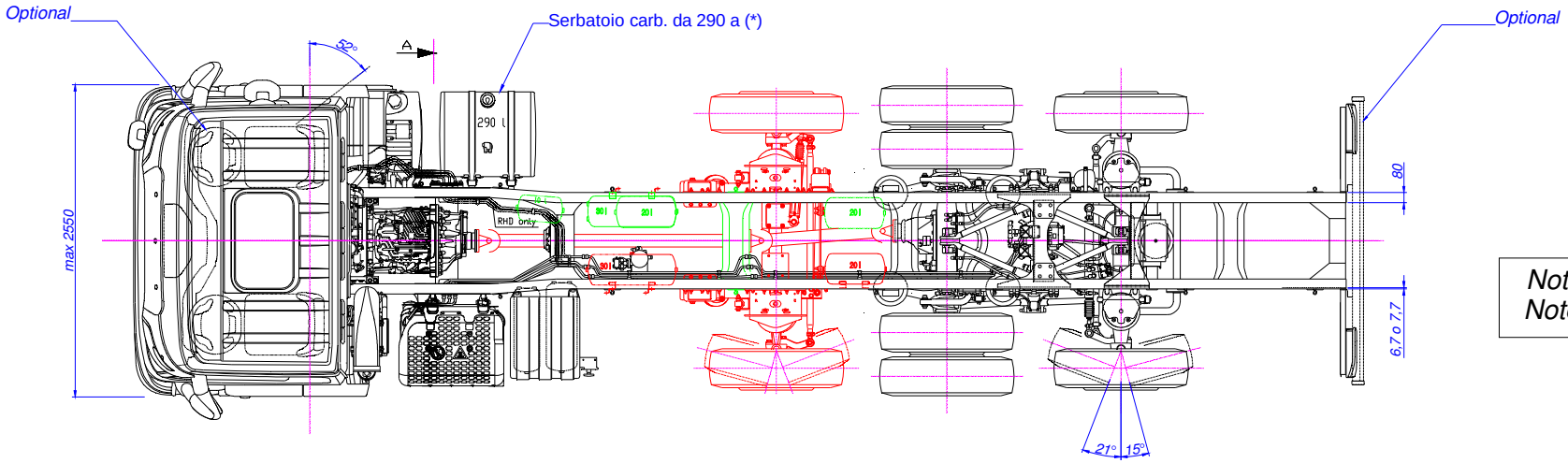

Nota (*): vedere scheda informativa
Note (*): see information document

Vista A/ View A

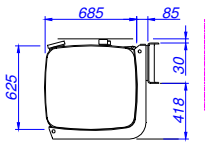

Varianti/variants	Versioni/versions	A	B
???	??CB?????????????P?? ?	3735	1365
???	??CB?????????????Q?? ?	3780	1320
???	??CB?????????????R?? ?	3690	1410

Tightening tolerance - ISO4	ISO 2768 - ---- Tolerancing ISO 8015	Author A. TIBALDO	Date 31/01/2020	Scale 1:20
S.T. System Truck S.p.A. via Piave, 28 - I 46048 Roverbella (MN) Tel. +39 0376 696808 www.stsystemtruck.com		Description FIGURINO IVECO S-WAY AD/AT260S Y/PS/FS ON - FILTRO COMPATTO O SOTTO-CABINA - CONF. 1+3 - PASSO 5100 MM		
		Code 55.01.03.0160	Drawing 55.01.03.0160	Sheet 2/2 Format A1

E24*13R11/18*0056*02

Disegno per omologazione
Drawing for type-approval

Varianti/variants	Versioni/versions	A	B
2?S	??GB?????????????P?? ?	4335	1365
2?S	??GB?????????????Q?? ?	4380	1320
2?S	??GB?????????????R?? ?	4290	1410

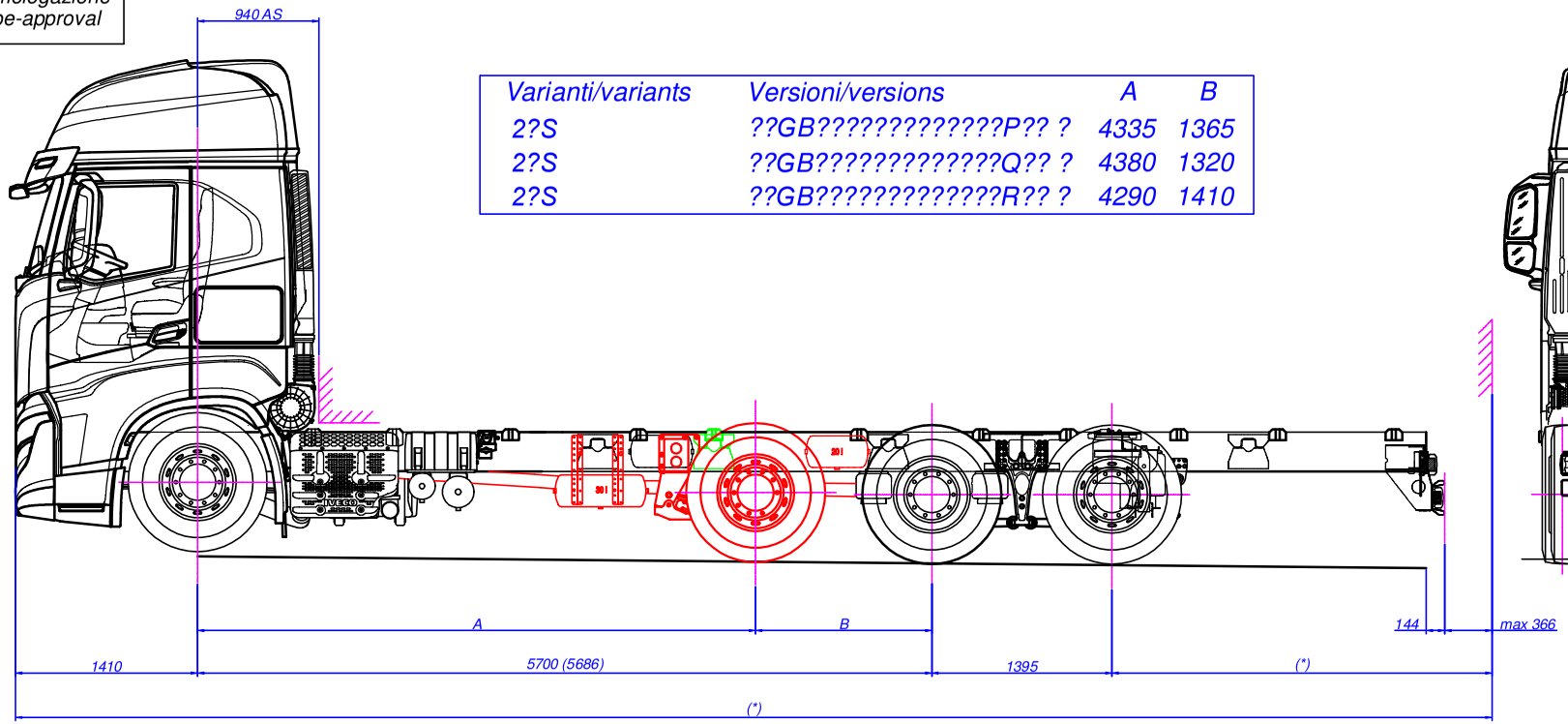

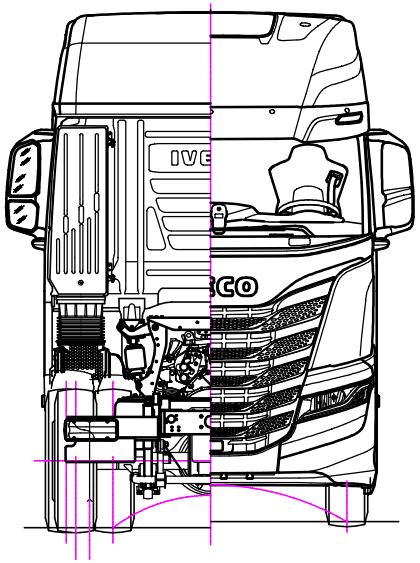

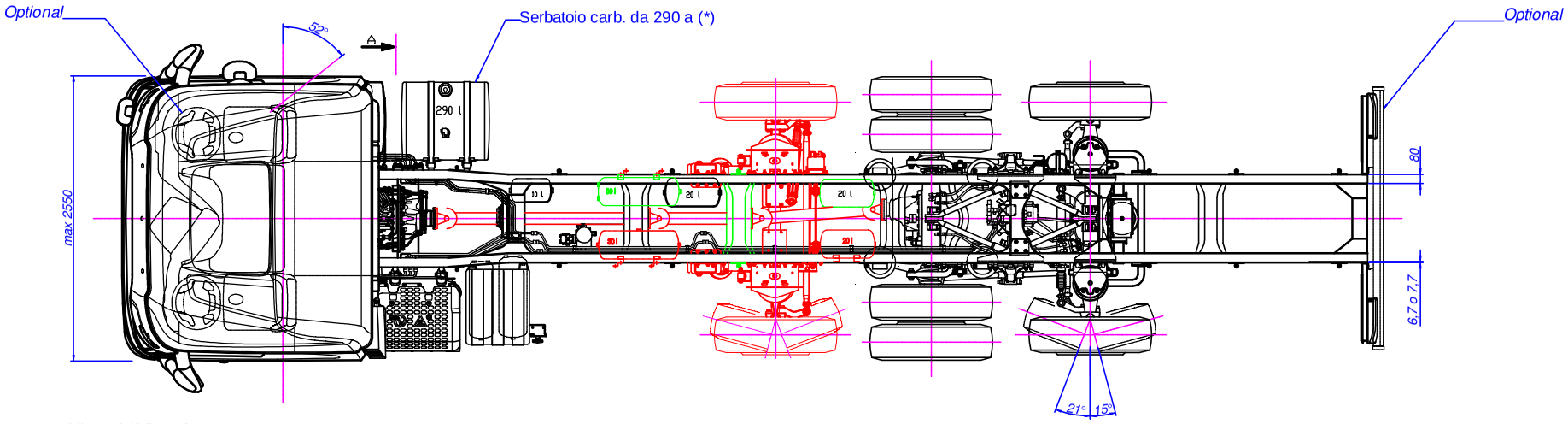

Vista A/ View A

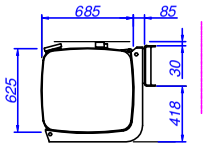

Nota (*): vedere scheda informativa
Note (*): see information document

Tightening tolerance - IDO4	ISO 2768 - ---- Tolerancing ISO 8015	Author: A.TIBALDO	Date: 31/01/2020	Scale: 1:20
S.T. System Truck S.p.A. Via Piersa, 28 - I-46048 Roverbella (MN) Tel. +39 0376 696809 www.stsystemtruck.com	All proprietary rights reserved by ST System Truck S.p.A. The reproduction, distribution and utilization of this document as well as the communication of its content to others without express authorization is prohibited (see ISO 16016:2016).	Description: FIGURINO IVECO S-WAY AS260S Y/PS/FS ON CONF. 1+3 - PASSO 5700 MM		
		Code: 55.01.03.0167	Drawing: 55.01.03.0167	Sheet: 1/1 Format: A1

E24*13R11/18*0056*02

Disegno per omologazione
Drawing for type-approval

Varianti/variants	Versioni/versions	A	B
???	??CB?????????????P?? ?	4335	1365
???	??CB?????????????Q?? ?	4380	1320
???	??CB?????????????R?? ?	4290	1410

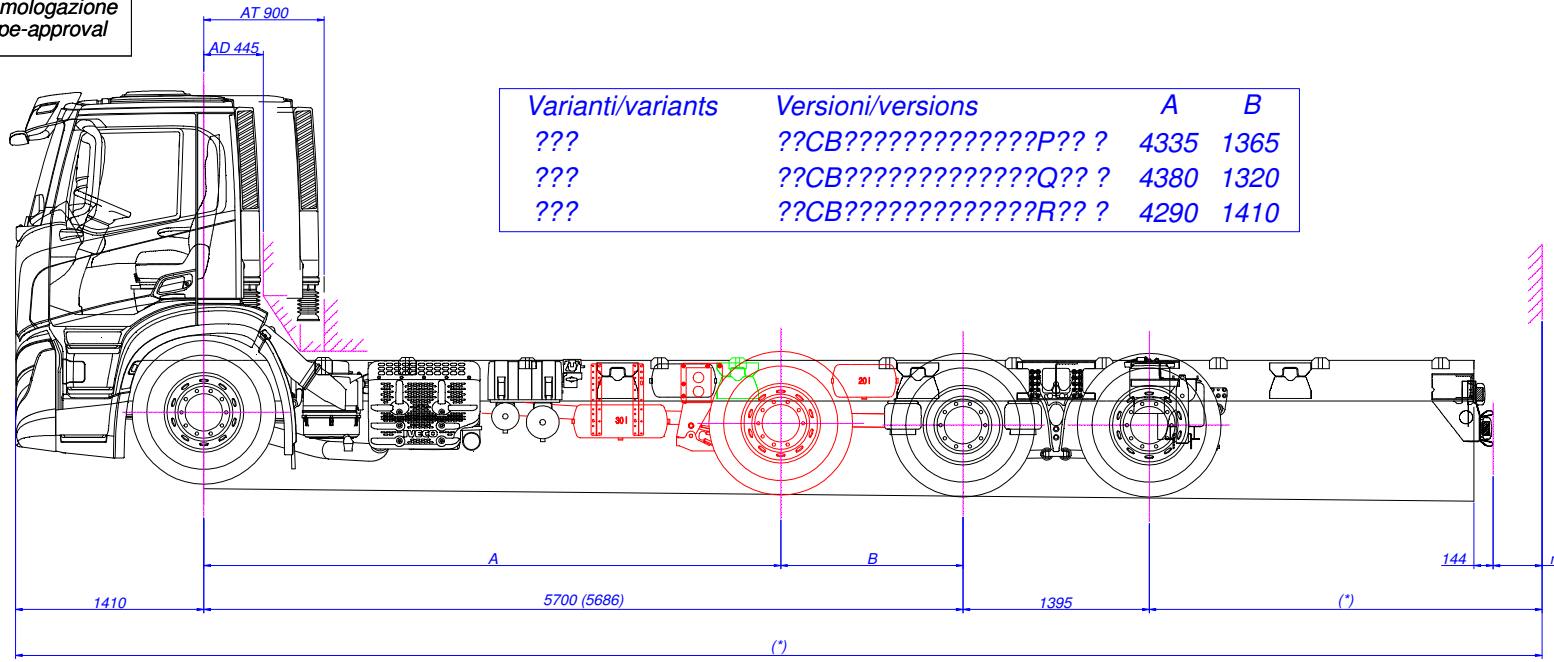

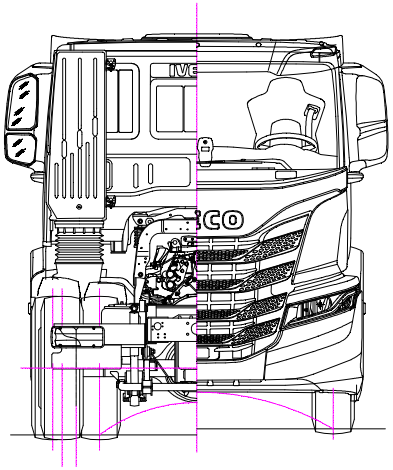

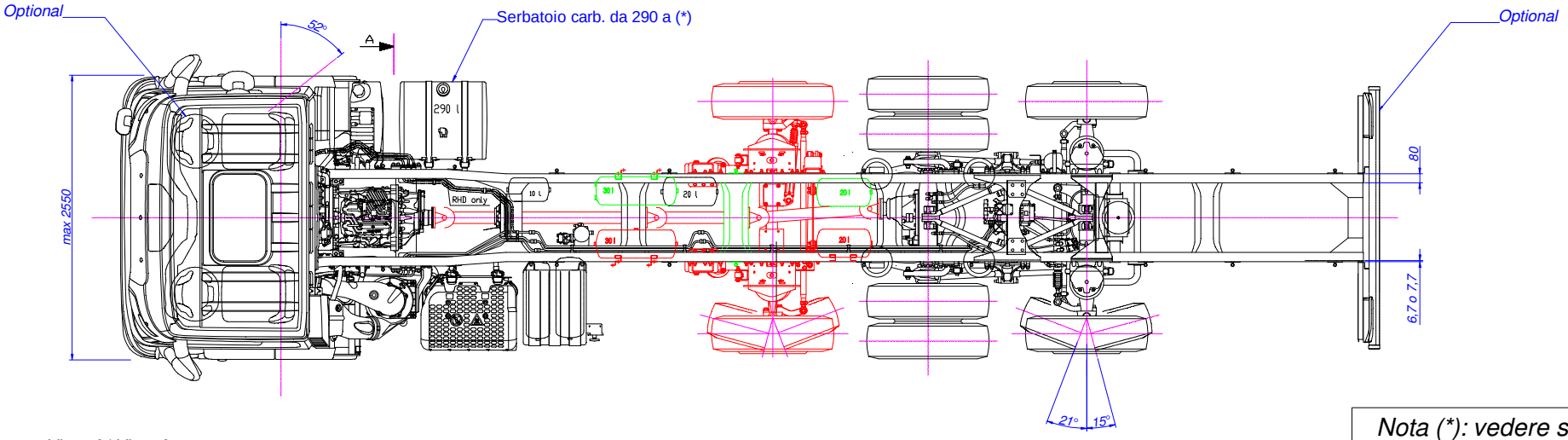

Vista A/ View A

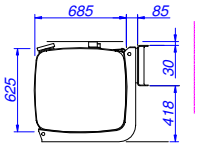

Nota (*): vedere scheda informativa
Note (*): see information document

Tightening tolerance - ISO4	ISO 2768 - ---- Tolerancing ISO 8015	Author A. TIBALDO	Date 31/01/2020	Scale 1:20
S.T. System Truck S.p.A. via Piave, 28 - I 46048 Roverbella (MN) Tel. +39 0376 696806 www.stsystemtruck.com	All proprietary rights reserved by S.T. System Truck S.p.A. The reproduction, distribution and utilisation of this document as well as the communication of its contents to others without express authorisation is prohibited (see ISO 16016:2016)	Description FIGURINO IVECO S-WAY AD/AT260S Y/PS/FS ON FILTRO STANDARD - CONF. 1+3 - PASSO 5700 MM		
		Code 55.01.03.0161	Drawing 55.01.03.0161	Sheet 1/2 Format A1

E24*13R11/18*0056*02

Disegno per omologazione
Drawing for type-approval

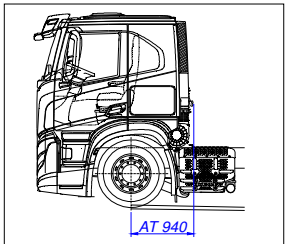

Cabina AT con filtro sotto-cabina

Configurazione valida anche per veicolo con cabina AT e filtro sotto-cabina (vedi dettaglio)

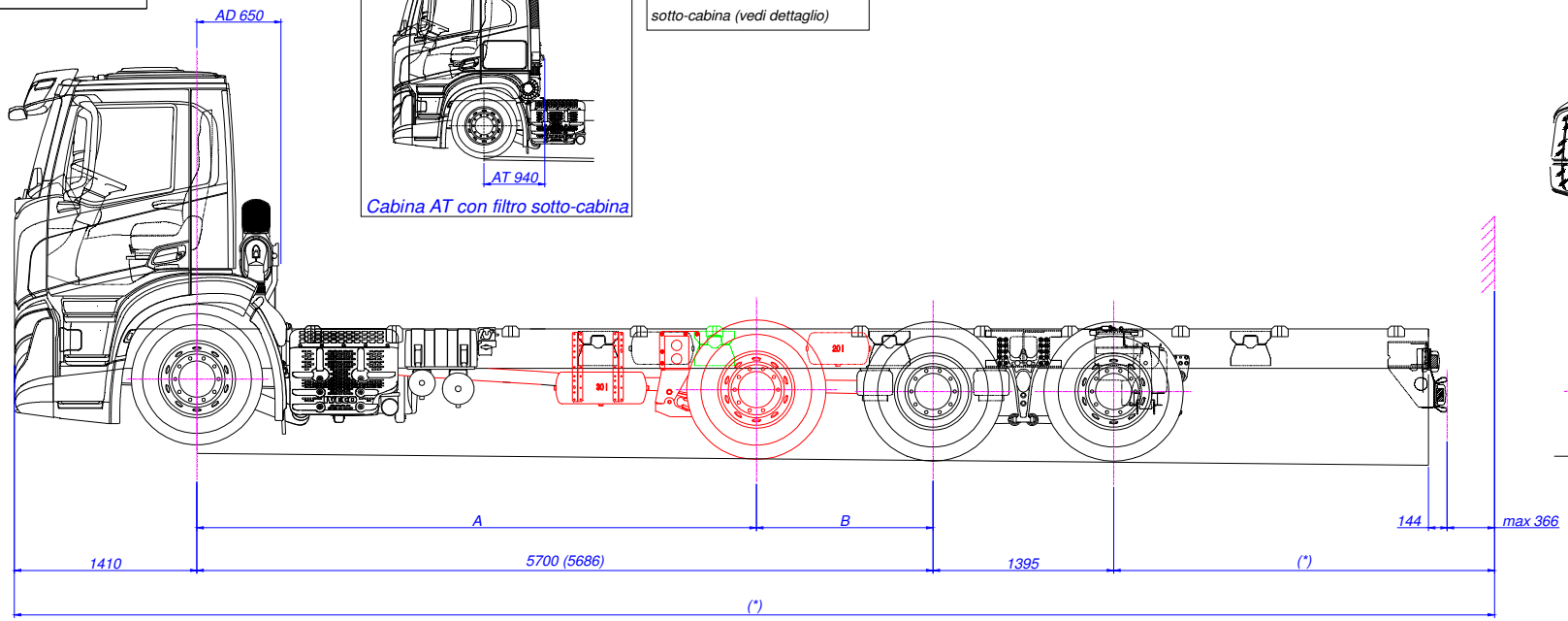

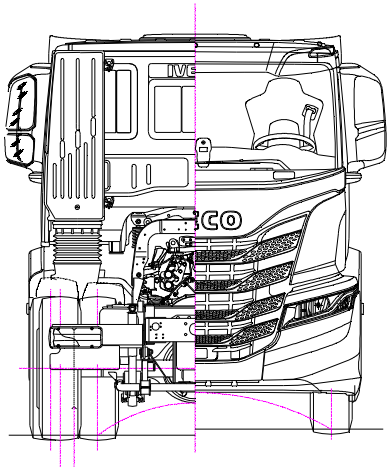

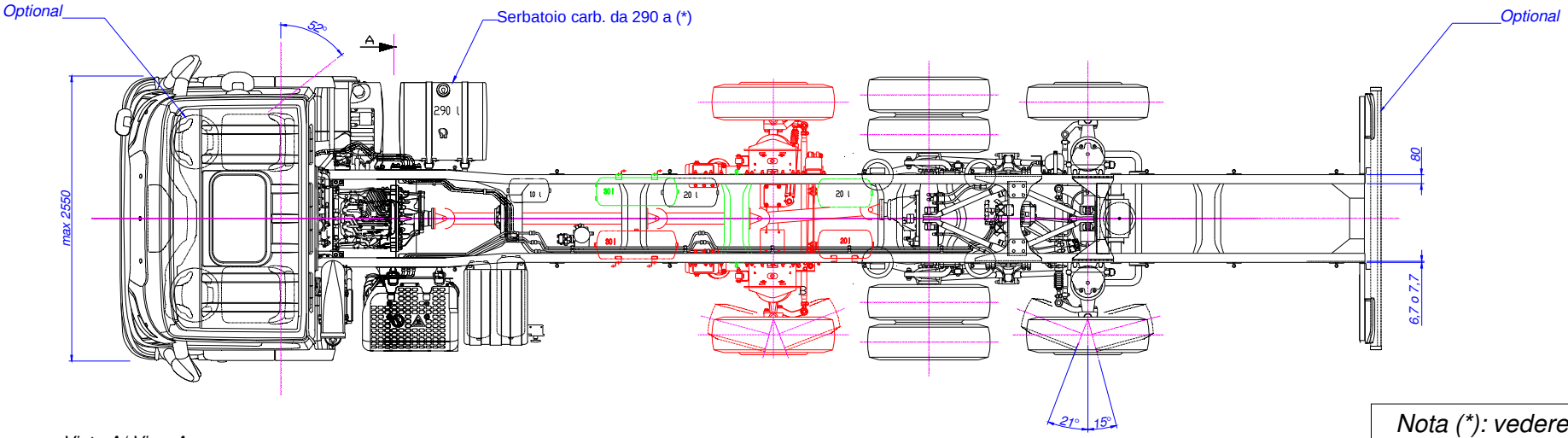

Vista A/ View A

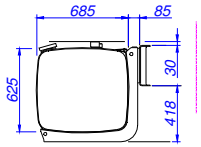

Nota (*): vedere scheda informativa
Note (*): see information document

Varianti/variants	*Versioni/versions*	*A*	*B*
???	*??CB????????????P?? ?*	*4335*	*1365*
???	*??CB????????????Q?? ?*	*4380*	*1320*
???	*??CB????????????R?? ?*	*4290*	*1410*

Tightening tolerance - ISO4	ISO 2768 - ---- Tolerancing ISO 8015	Author A. TIBALDO	Date 31/01/2020	Scale 1:20
S.T. System Truck S.p.A. via Piave, 28 - I 46048 Roverbella (MN) Tel. +39 0376 696006 www.stsystemtruck.com		Description FIGURINO IVECO S-WAY AD/AT260S Y/PS/FS ON - FILTRO COMPATTO O SOTTO-CABINA - CONF. 1+3 - PASSO 5700 MM		
		Code 55.01.03.0161	Drawing 55.01.03.0161	Sheet 2/2 Format A1

E24*13R11/18*0056*02

Disegno per omologazione
Drawing for type-approval

Varianti/variants	Versioni/versions	A	B
2?S	??HB?????????????P?? ?	4685	1365
2?S	??HB?????????????Q?? ?	4730	1320
2?S	??HB?????????????R?? ?	4640	1410

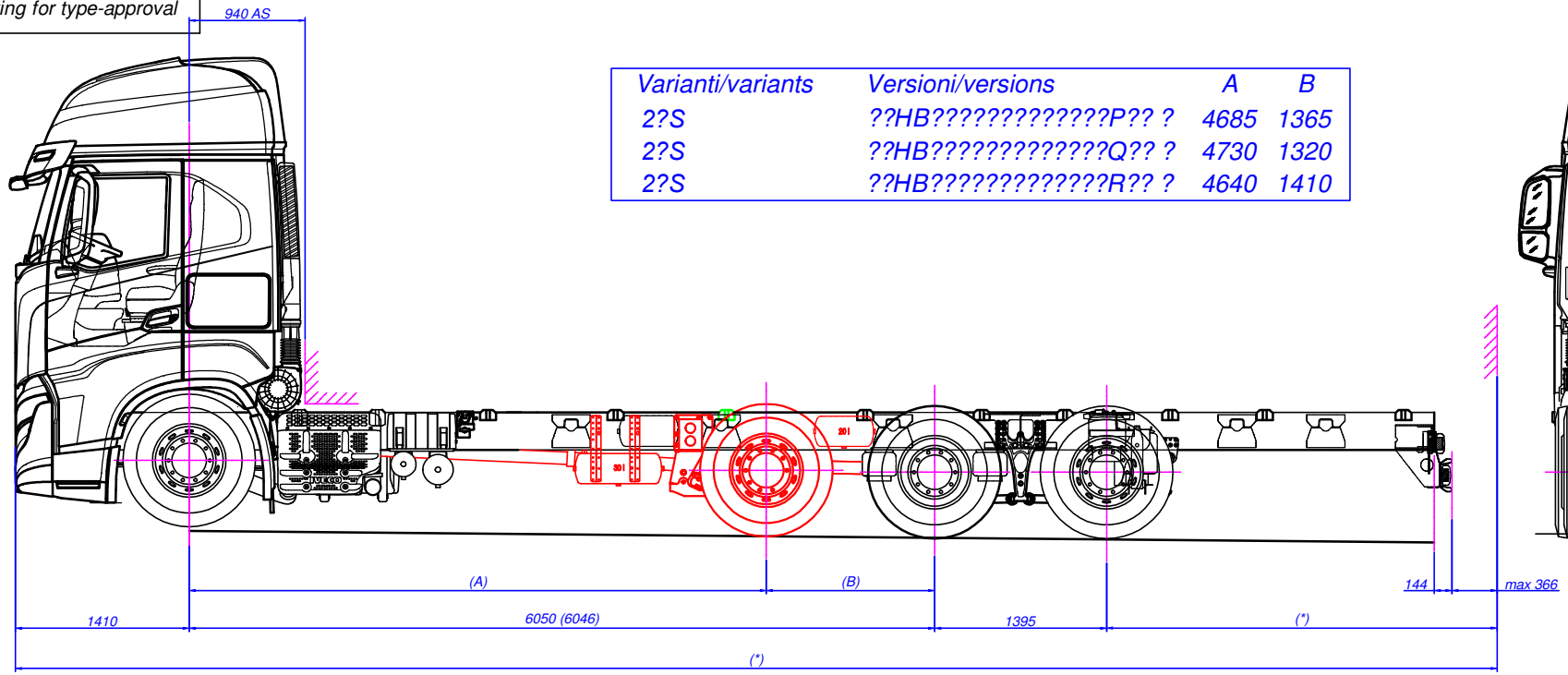

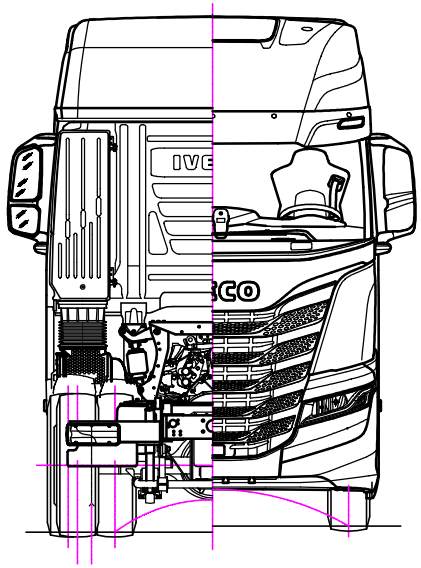

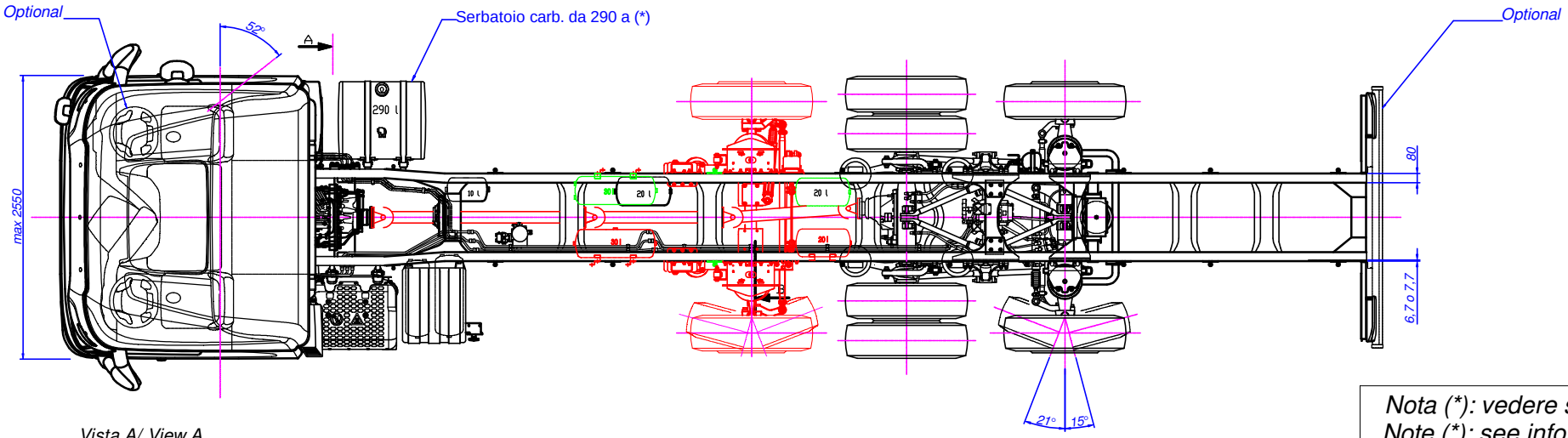

Vista A/ View A

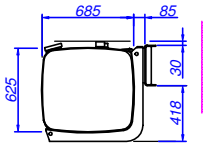

Nota (*): vedere scheda informativa
Note (*): see information document

Tightening tolerance - ISO4	ISO 2768 - ---- Tolerancing ISO 8015	Author A. TIBALDO	Date 31/01/2020	Scale 1:20
S.T. System Truck S.p.A. Via Pasta, 28 - I-46048 Roverbella (MN) Tel. +39 0376 696008 www.stsystemtruck.com	All proprietary rights reserved by S.T. System Truck S.p.A. The reproduction, distribution and utilisation of this document as well as the communication of its contents to others without express authorisation is prohibited (see ISO 16016:2016)	Description FIGURINO IVECO S-WAY AS260S Y/PS/FS ON CONF. 1+3 - PASSO 6050 MM		
		Code 55.01.03.0168	Drawing 55.01.03.0168	Sheet 1/1 Format A1

E24*13R11/18*0056*02

Disegno per omologazione
Drawing for type-approval

Varianti/variants	Versioni/versions	A	B
???	??CB?????????????P?? ?	4685	1365
???	??CB?????????????Q?? ?	4730	1320
???	??CB?????????????R?? ?	4640	1410

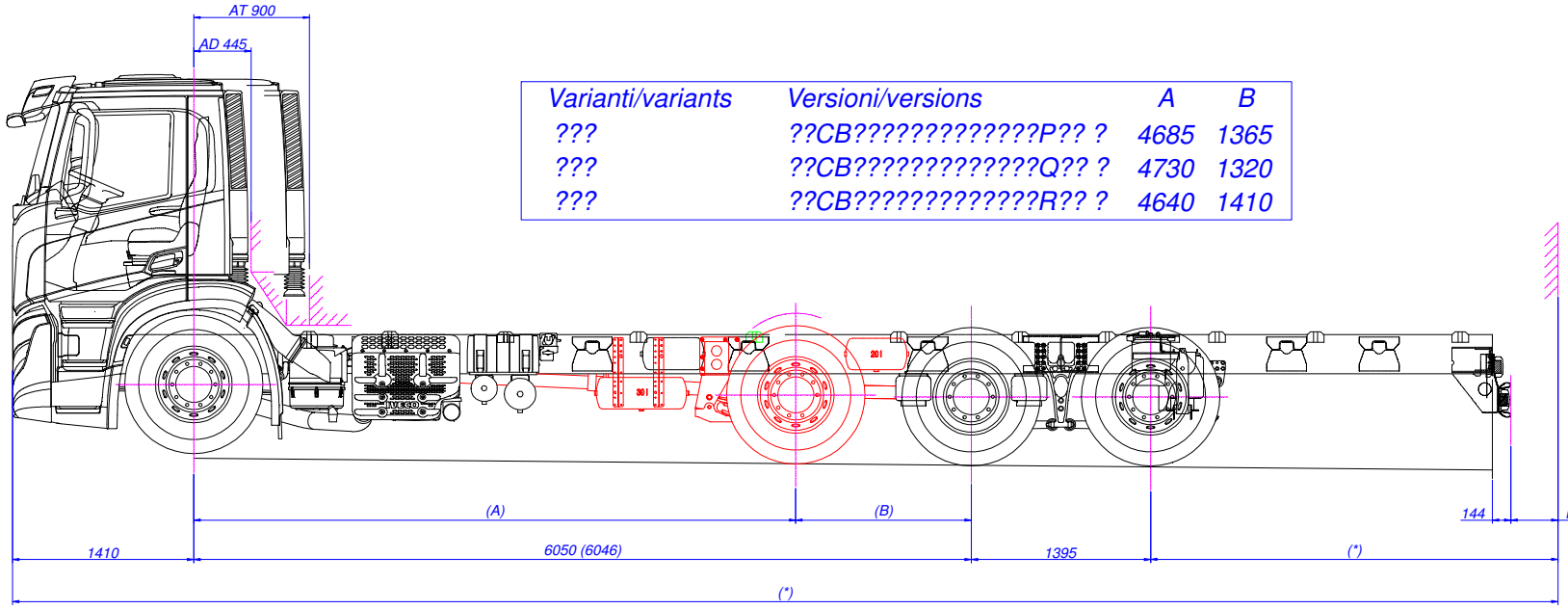

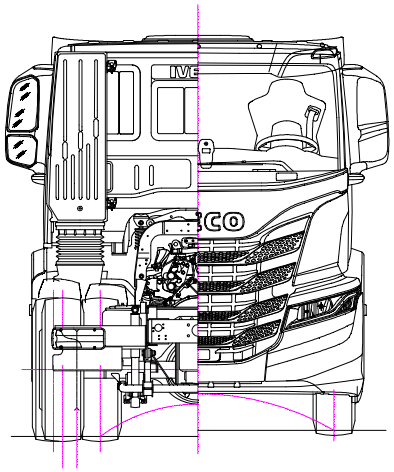

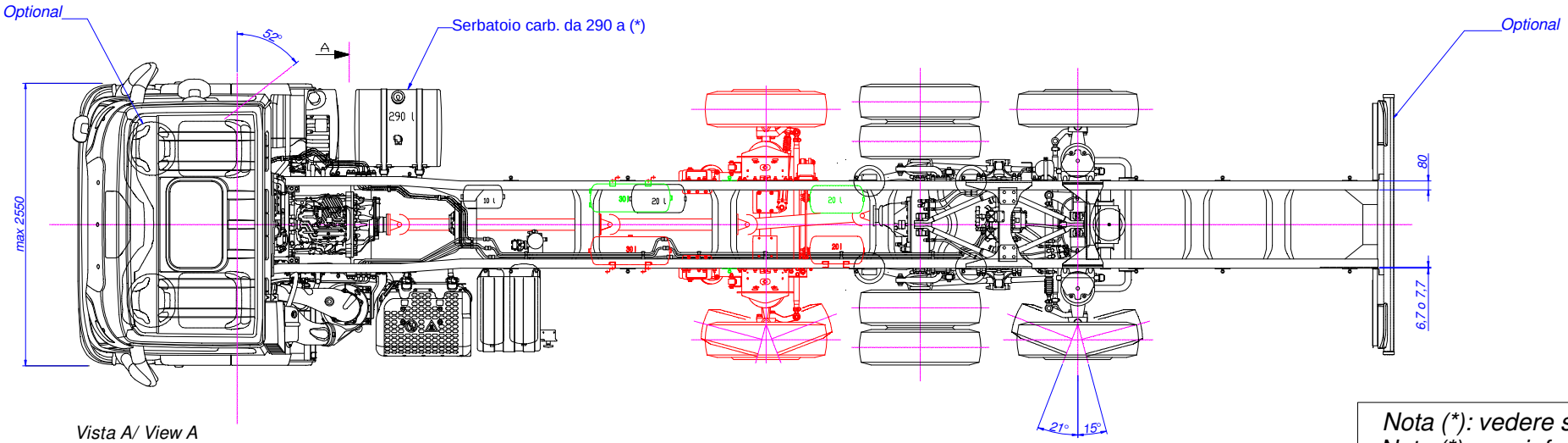

Vista A/ View A

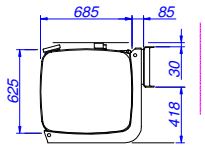

Nota (*): vedere scheda informativa
Note (*): see information document

Tightening tolerance - ISO4	ISO 2768 - ---- Tolerancing ISO 8015	Author A. TIBALDO	Date 31/01/2020	Scale 1:20
S.T. System Truck S.p.A. via Piave, 28 - I 46048 Roverbella (MN) Tel. +39 0376 696696 www.stsystemtruck.com	All proprietary rights reserved by S.T. System Truck S.p.A. The reproduction, distribution and utilisation of this document as well as the communication of its contents to others without express authorisation is prohibited (see ISO 16016:2016)	Description FIGURINO IVECO S-WAY AD/AT260S Y/PS/FS ON FILTRO STANDARD - CONF. 1+3 - PASSO 6050 MM		
		Code 55.01.03.0162	Drawing 55.01.03.0162	Sheet 1/2 Format A1

E24*13R11/18*0056*02

Disegno per omologazione
Drawing for type-approval

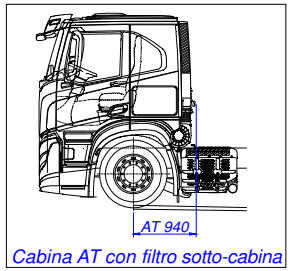

Cabina AT con filtro sotto-cabina

Configurazione valida anche per veicolo con cabina AT e filtro sotto-cabina (vedi dettaglio)

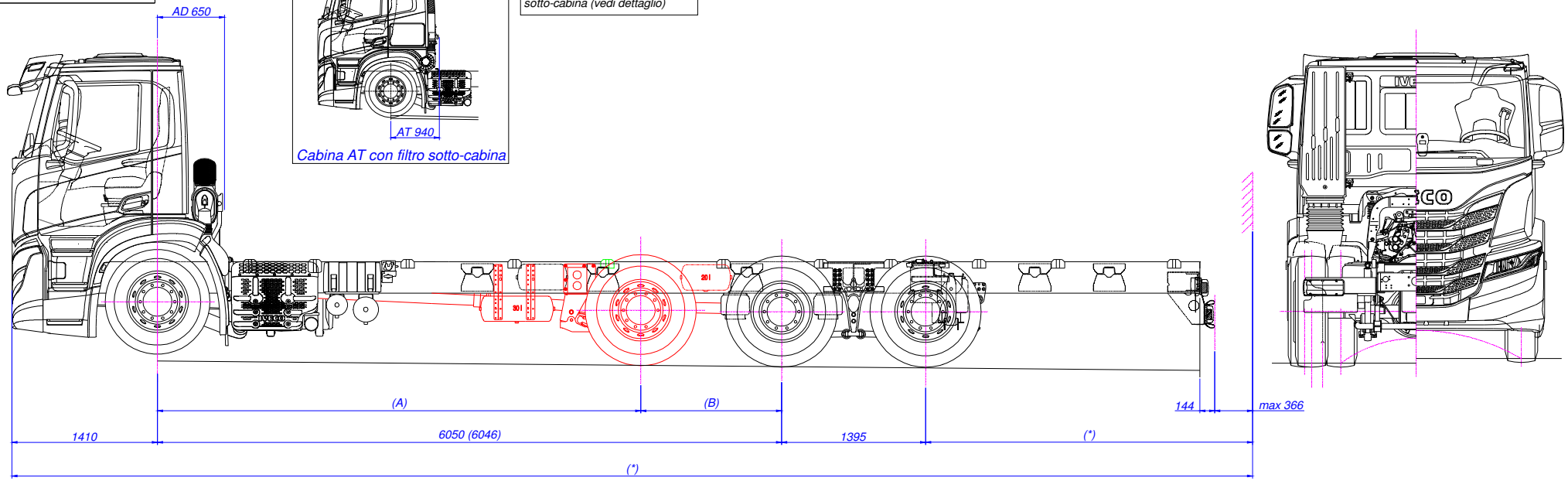

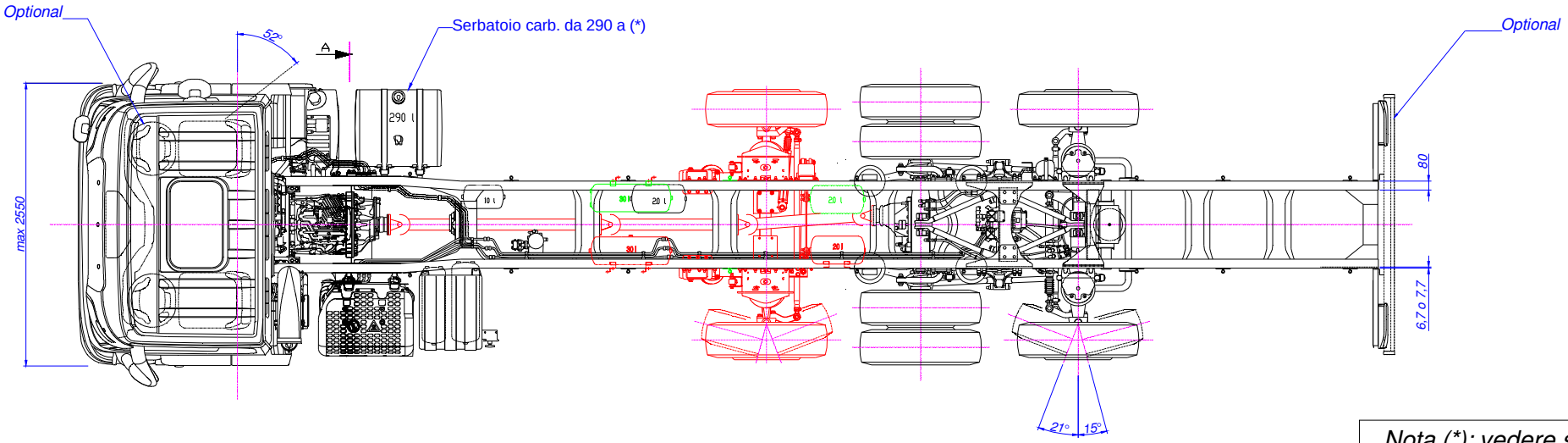

Vista A/ View A

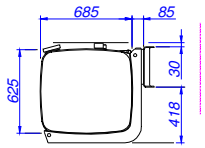

Varianti/variants	Versioni/versions	A	B
???	??CB?????????????P?? ?	4685	1365
???	??CB?????????????Q?? ?	4730	1320
???	??CB?????????????R?? ?	4640	1410

Nota (*): vedere scheda informativa
Note (*): see information document

Tightening tolerance - ISO4	ISO 2768 - ---- Tolerancing ISO 8015	Author A. TIBALDO	Date 31/01/2020	Scale 1:20
S.T. System Truck S.p.A. via Piave, 28 - I 46048 Roverbella (MN) Tel. +39 0376 696696 www.stsystemtruck.com	All proprietary rights reserved by S.T. System Truck S.p.A. The reproduction, distribution and utilisation of this document as well as the communication of its contents to others without express authorisation is prohibited (see ISO 16016:2016)	Description FIGURINO IVECO S-WAY AD/AT260S Y/PS/FS ON - FILTRO COMPATTO O SOTTO-CABINA - CONF. 1+3 - PASSO 6050 MM		
		Code 55.01.03.0162	Drawing 55.01.03.0162	Sheet 2/2 Format A1

E24*13R11/18*0056*02

Disegno per omologazione
Drawing for type-approval

Varianti/variants	Versioni/versions	A	B
4CS	??CB????????????P?? ?	2835	1365
4CS	??CB????????????Q?? ?	2880	1320
4CS	??CB????????????R?? ?	2790	1410

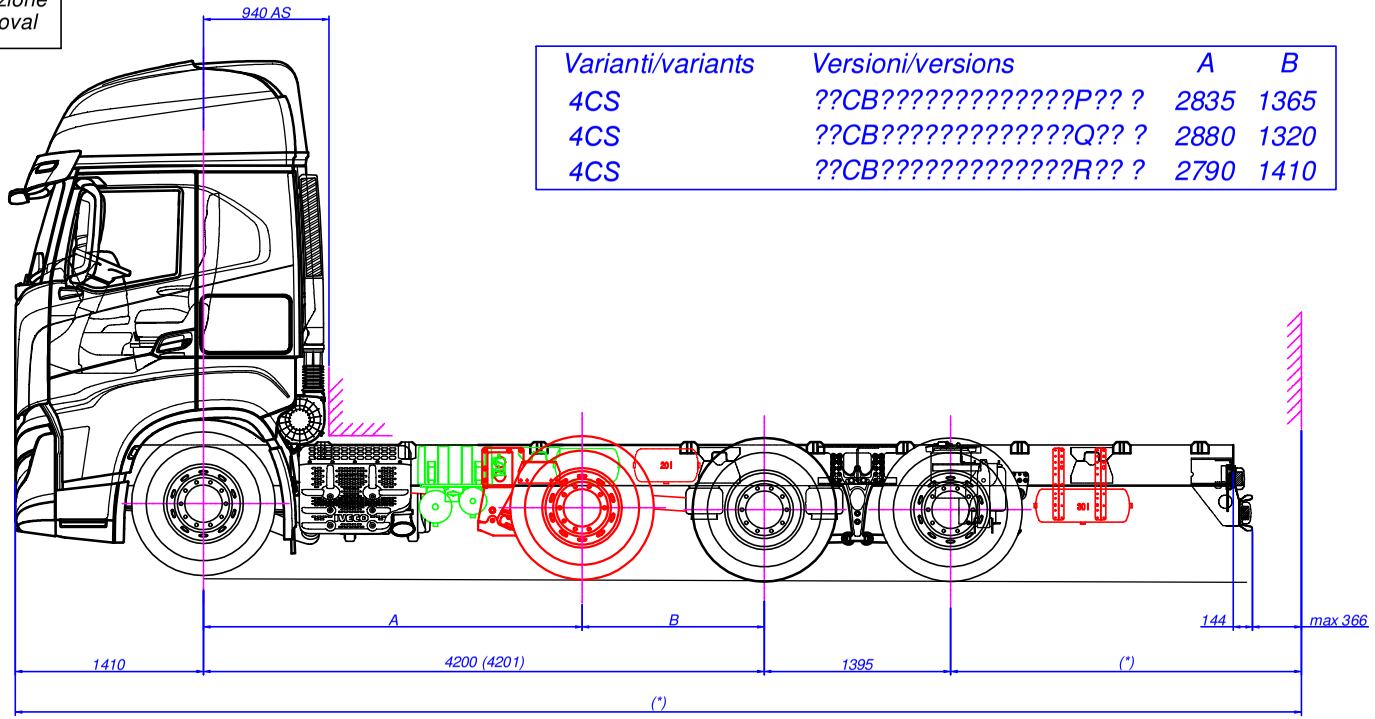

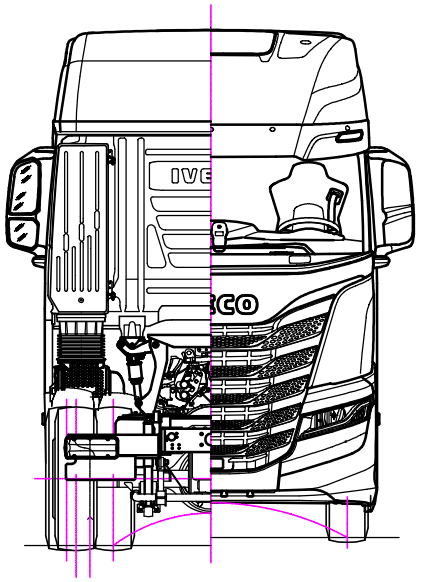

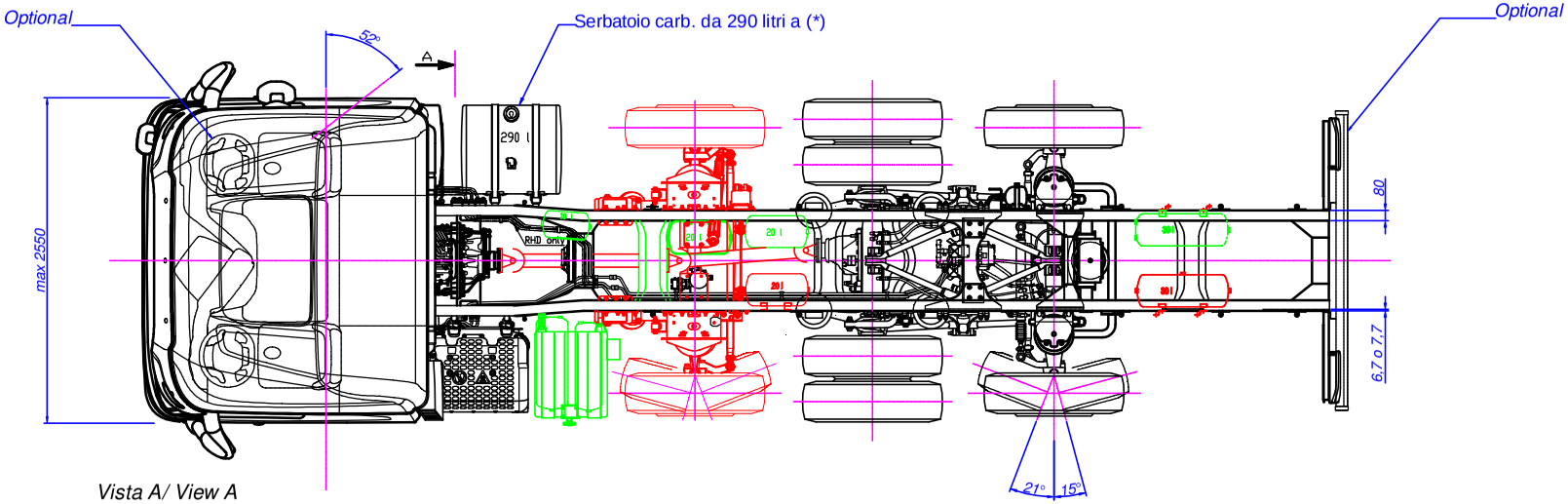

Vista A/ View A

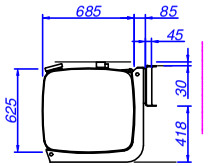

E24*13R11/18*0056*02

Tightening tolerance – ISO4	ISO 2768 – ---- Tolerancing ISO 8015	Author A.TIBALDO	Date 31/01/2020		Scale 1:20
S.T. System Truck S.p.A. Via Parsa, 28 – I-46048 Roverbella (MN) Tel. +39 0376 696809 www.stsystemtruck.com	All proprietary rights reserved by ST System Truck S.p.A. The reproduction, distribution and utilization of this document as well as the communication of its content to others without express authorization prohibited (see ISO 16016:2016).	Description FIGURINO IVECO X-WAY AS280X Y/PS ON CONF. 1+3 – PASSO 4200 MM			
		Code 55.01.03.0175	Drawing 55.01.03.0175	Sheet 1/1	Format A1

Disegno per omologazione
Drawing for type-approval

Varianti/variants	Versioni/versions	A	B
???	??CB??????????????P?? ?	2835	1365
???	??CB??????????????Q?? ?	2880	1320
???	??CB??????????????R?? ?	2790	1410

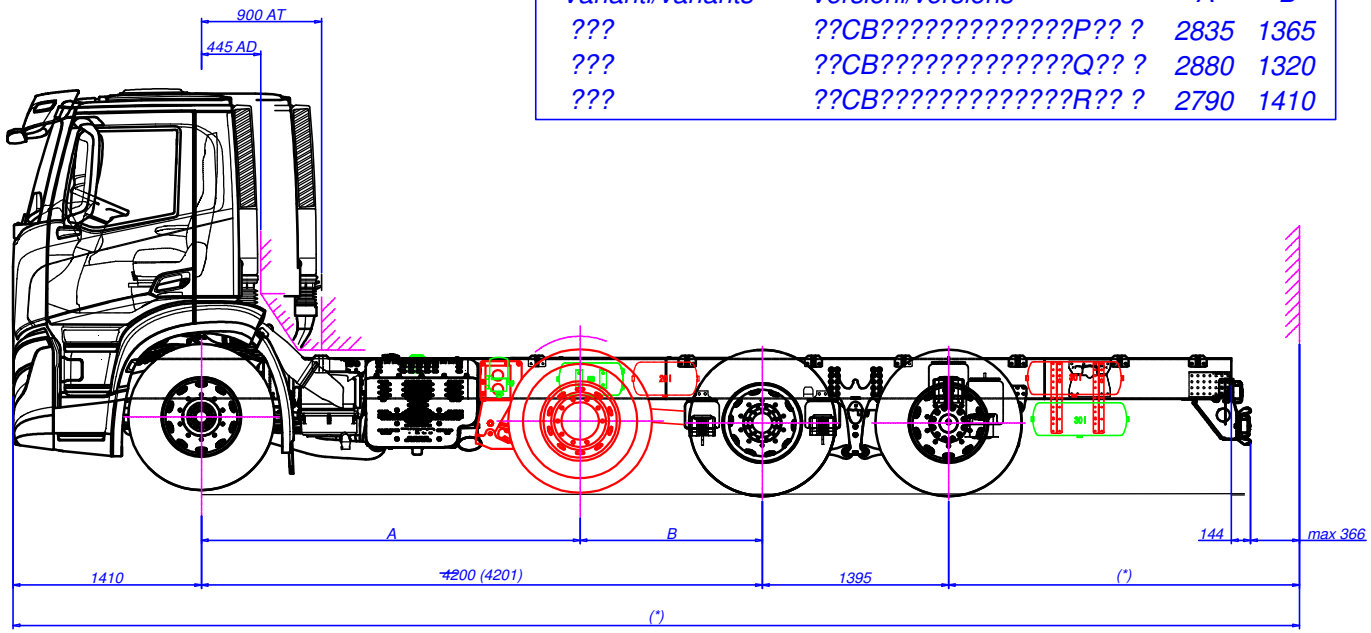

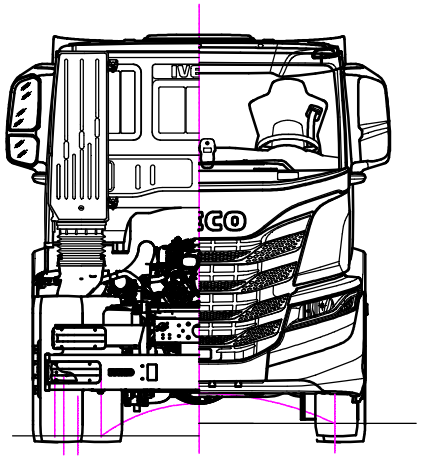

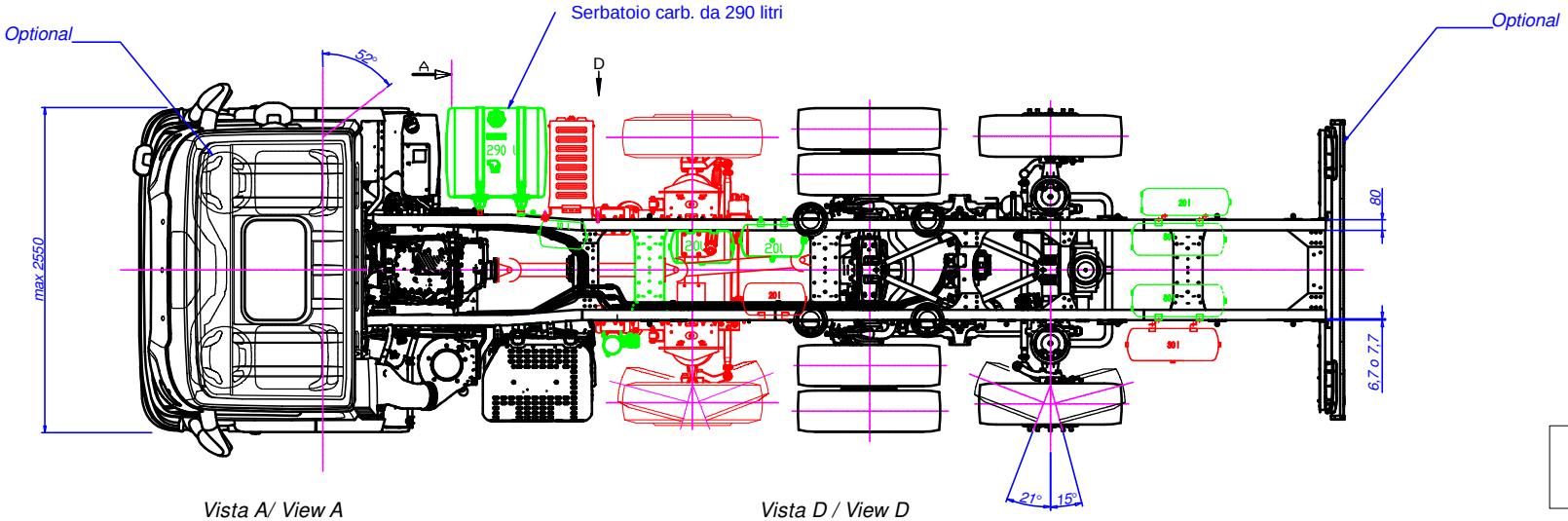

Vista A/ View A

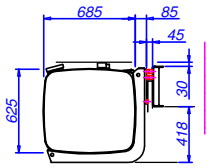

Vista D / View D

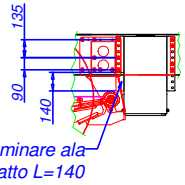

Nota (*): vedere scheda informativa
Note (*): see information document

Tightening tolerance - ISO4	ISO 2768 - ---- Tolerancing ISO 8015	Author A. TIBALDO	Date 31/01/2020		Scale 1:20
S.T. System Truck S.p.A. Via Piave, 28 - I-46048 Roverbella (MN) Tel. +39 0376 696008 www.stsystemtruck.com	All proprietary rights reserved by S.T. System Truck S.p.A. The reproduction, distribution and utilisation of this document as well as the communication of its contents to others without express authorisation is prohibited (see ISO 16016:2016)	Description FIGURINO IVECO X-WAY AD/AT280X Y/PS ON FILTRO STANDARD - CONF. 1+3 - PASSO 4200 MM			
		Code 55.01.03.0169	Drawing 55.01.03.0169	Sheet 1/2	Format A1

E24*13R11/18*0056*02

Disegno per omologazione
Drawing for type-approval

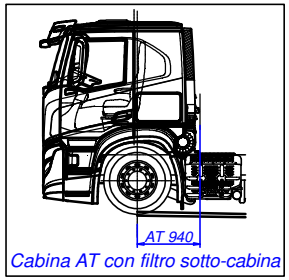

Cabina AT con filtro sotto-cabina

Configurazione valida anche per veicolo con cabina AT e filtro sotto-cabina (vedi dettaglio)

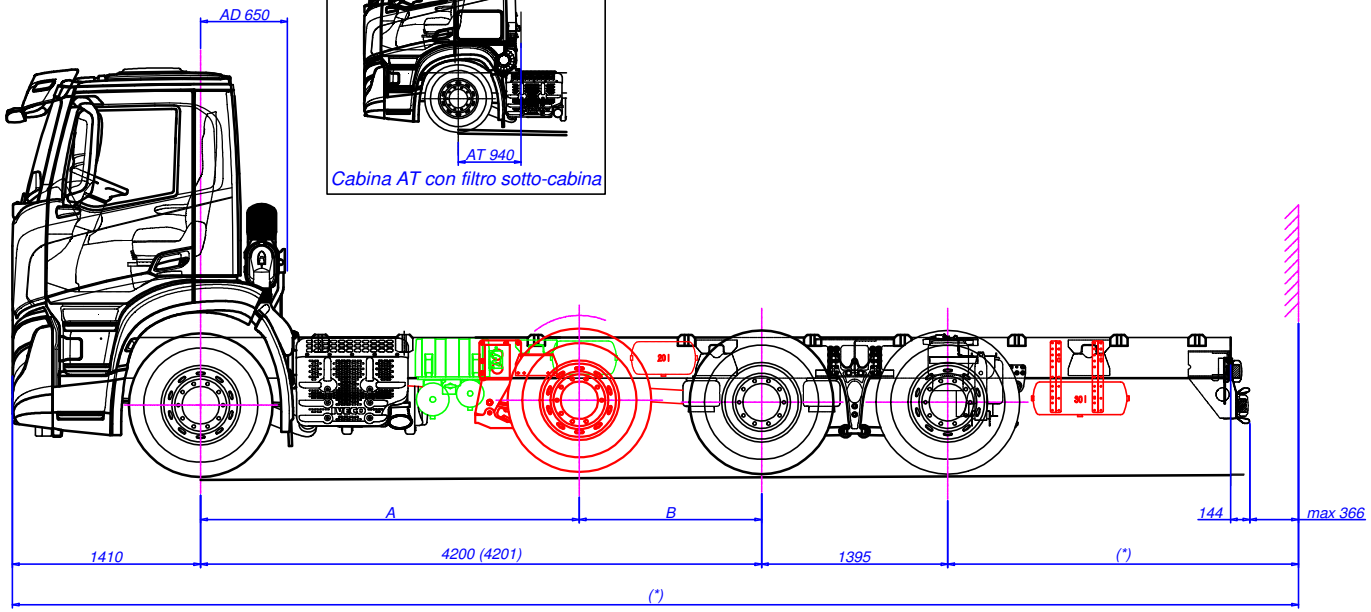

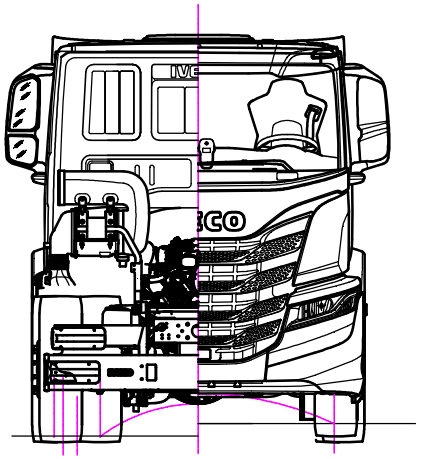

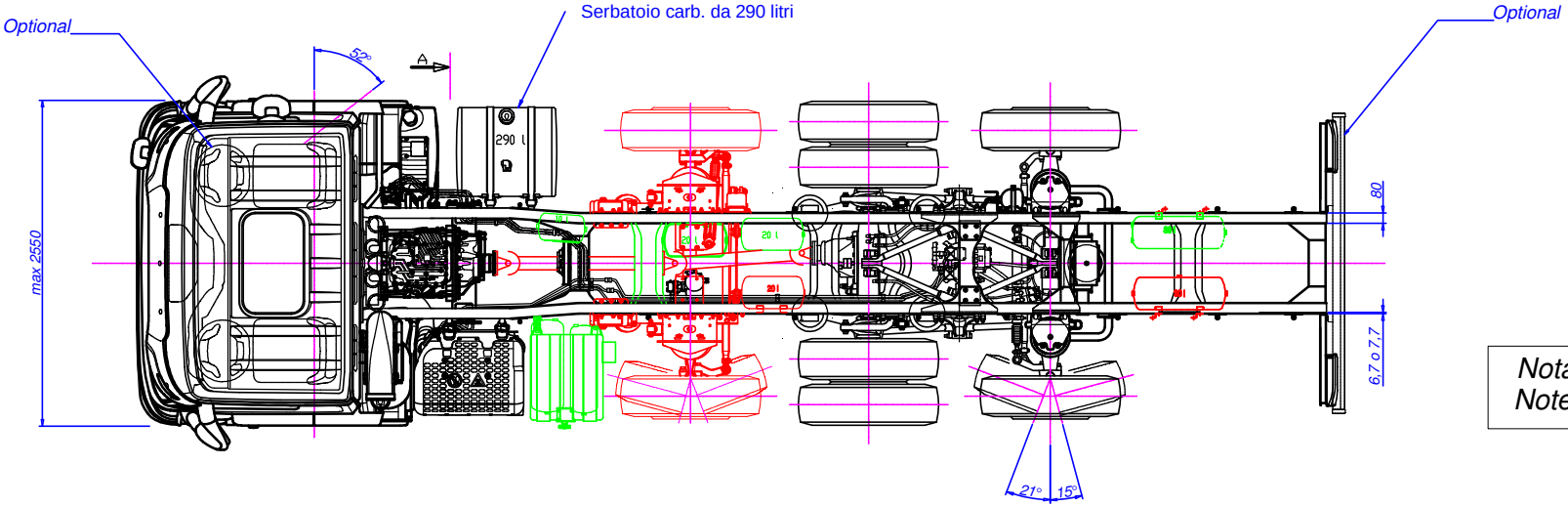

Vista A/ View A

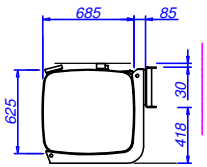

Nota (*): vedere scheda informativa
Note (*): see information document

Varianti/variants	Versioni/versions	A	B
???	??CB?????????????P?? ?	2835	1365
???	??CB?????????????Q?? ?	2880	1320
???	??CB?????????????R?? ?	2790	1410

Tightening tolerance - 1004	ISO 2768 - ---- Tolerancing ISO 8015	Author A. TIBALDO	Date 31/01/2020	Scale 1:20
S.T. System Truck S.p.A. Via Piave, 28 - I-46048 Roverbella (MN) Tel. +39 0376 696008 www.stsystemtruck.com	All proprietary rights reserved by S.T. System Truck S.p.A. The reproduction, distribution and utilization of this document as well as the communication of its contents to others without express authorization is prohibited (see ISO 16016:2016)	Description FIGURINO IVECO X-WAY AD/AT280X Y/PS ON - FILTRO COMPATTO O SOTTO-CABINA - CONF. 1+3 - PASSO 4200 MM		
		Code 55.01.03.0169	Drawing 55.01.03.0169	Sheet 2/2 Format A1

E24*13R11/18*0056*02

Disegno per omologazione
Drawing for type-approval

Varianti/variants	Versioni/versions	A	B
4CS	??DB?????????????P?? ?	3135	1365
4CS	??DB?????????????Q?? ?	3180	1320
4CS	??DB?????????????R?? ?	3090	1410

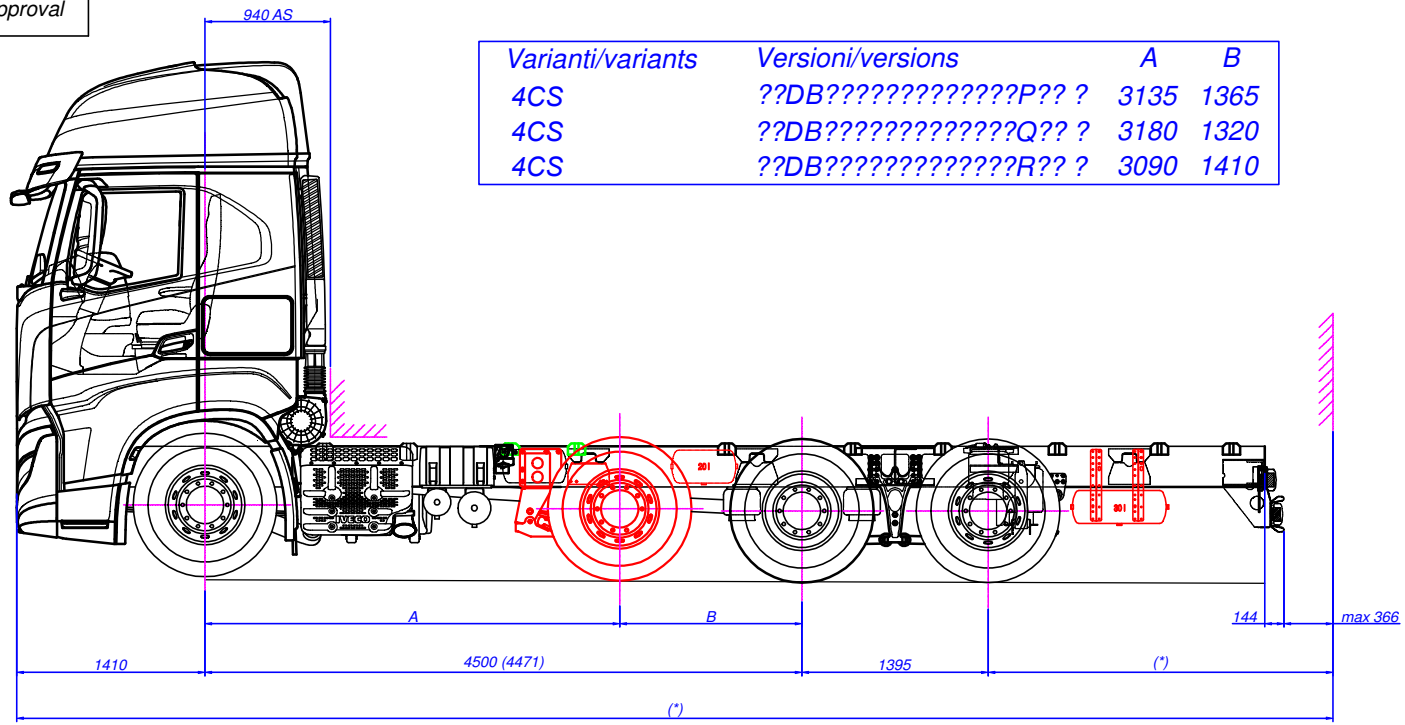

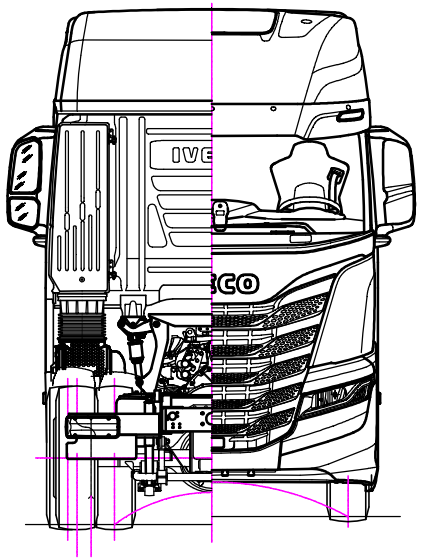

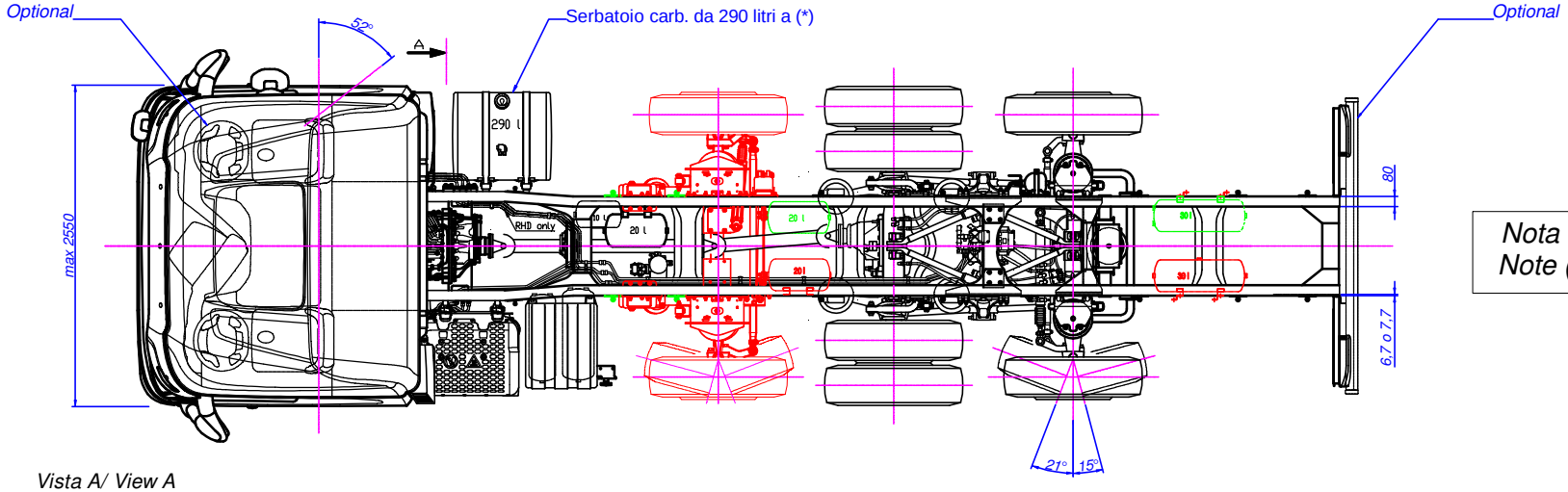

Nota (*): vedere scheda informativa
Note (*): see information document

Vista A/ View A

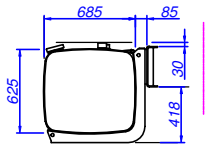

Tightening tolerance - 1004	ISO 2768 - ---- Tolerancing ISO 8015	Author A. TIBALDO	Date 31/01/2020		Scale 1:20
S.T. System Truck S.p.A. Via Piave, 28 - I-46048 Roverbella (MN) Tel. +39 0376 696004 www.stsystemtruck.com	All proprietary rights reserved by S.T. System Truck S.p.A. The reproduction, distribution and utilization of this document as well as the communication of its contents to others without express authorization is prohibited (see ISO 16016:2016)	Description FIGURINO IVECO X-WAY AS280X Y/PS ON CONF. 1+3 - PASSO 4500 MM			
		Code 55.01.03.0176	Drawing 55.01.03.0176	Sheet 1/1	Format A1

E24*13R11/18*0056*02

Disegno per omologazione
Drawing for type-approval

Varianti/variants	Versioni/versions	A	B
???	??CB?????????????P?? ?	3135	1365
???	??CB?????????????Q?? ?	3180	1320
???	??CB?????????????R?? ?	3090	1410

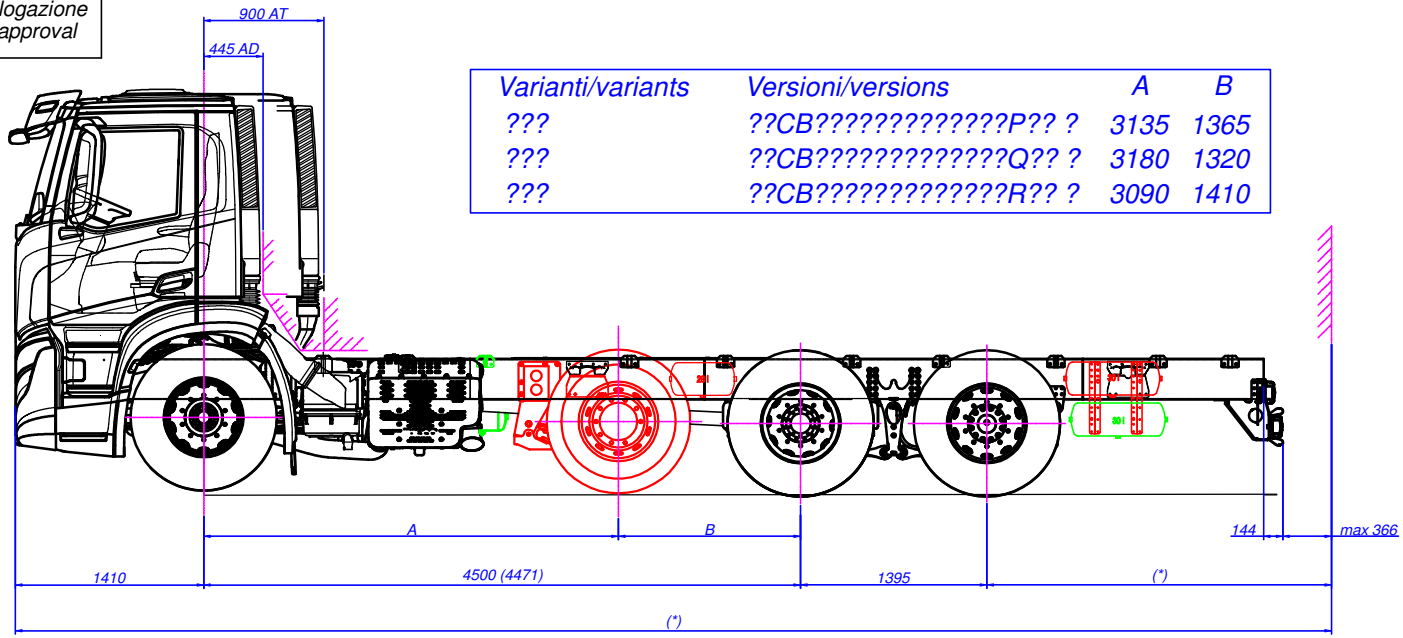

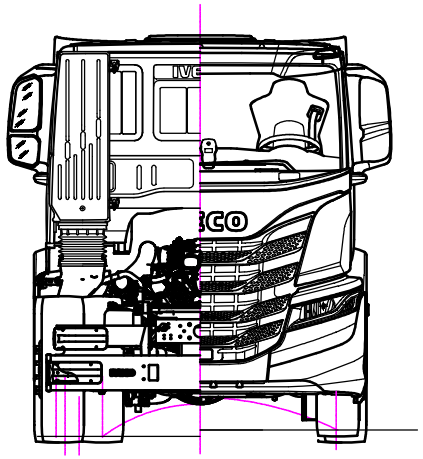

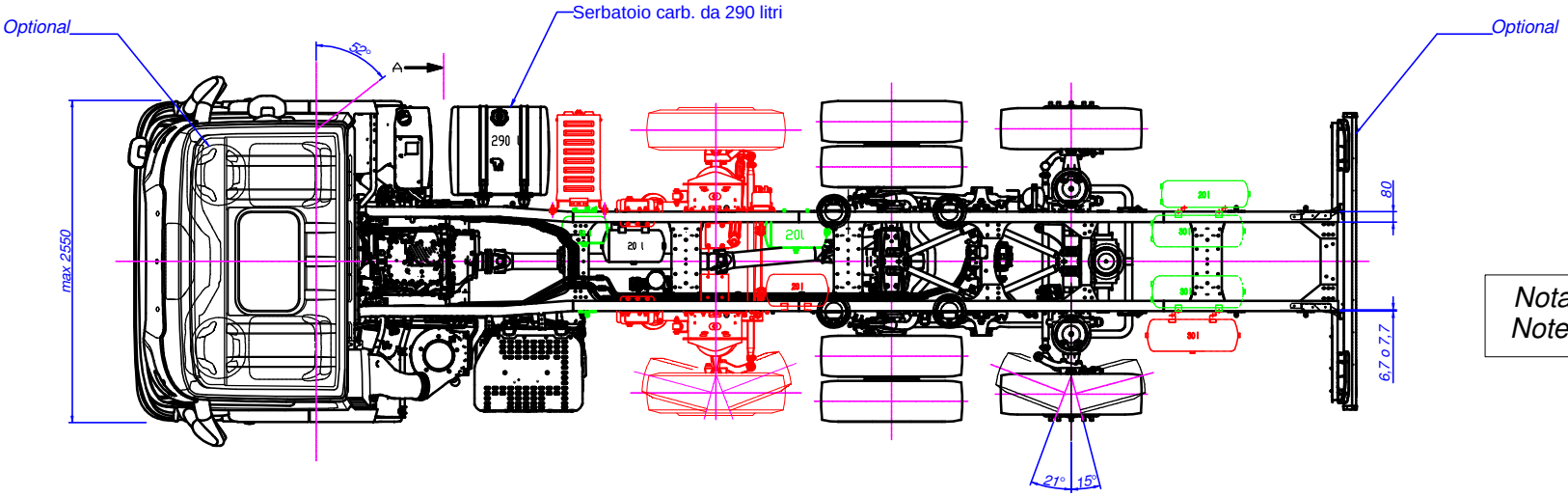

Nota (*): vedere scheda informativa
Note (*): see information document

Vista A/ View A

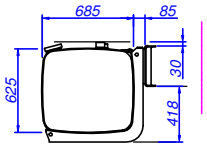

Tightening tolerance - 1004	ISO 2768 - ---- Tolerancing ISO 8015	Author A. TIBALDO	Date 31/01/2020		Scale 1:20
S.T. System Truck S.p.A. Via Piave, 28 - I 46048 Roverbella (MN) Tel. +39 0376 696016 www.stsystemtruck.com	All proprietary rights reserved by S.T. System Truck S.p.A. The reproduction, distribution and utilisation of this document as well as the communication of its contents to others without express authorisation is prohibited (see ISO 16016:2016)	Description FIGURINO IVECO X-WAY AD/AT280X Y/PS ON FILTRO STANDARD – CONF. 1+3 – PASSO 4500 MM			
		Code 55.01.03.0170	Drawing 55.01.03.0170	Sheet 1/2	Format A1

E24*13R11/18*0056*02

Disegno per omologazione
Drawing for type-approval

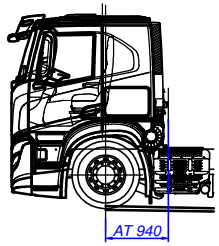

Cabina AT con filtro sotto-cabina

Configurazione valida anche per veicolo con cabina AT e filtro sotto-cabina (vedi dettaglio)

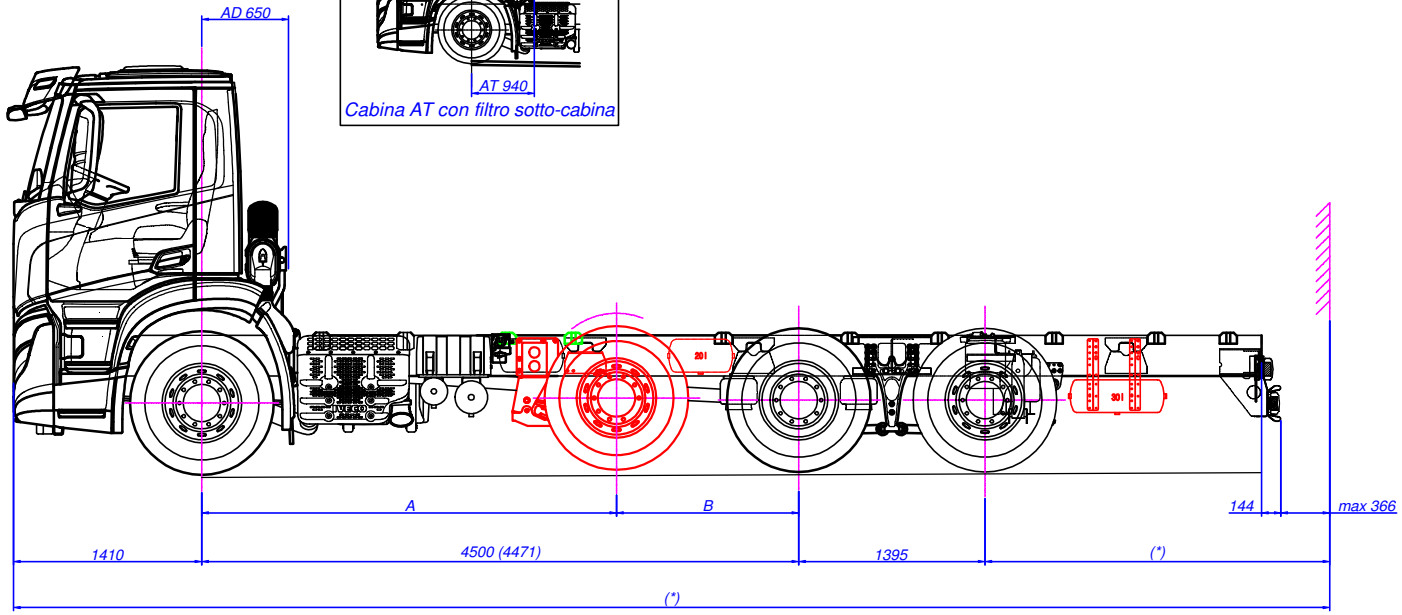

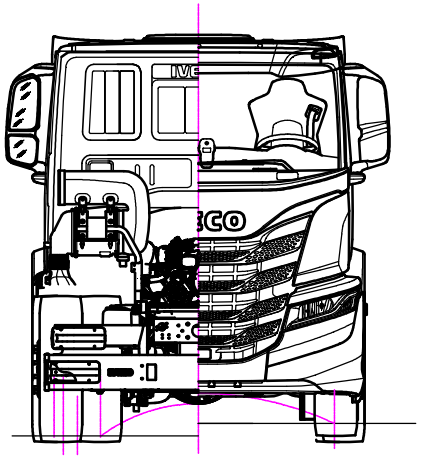

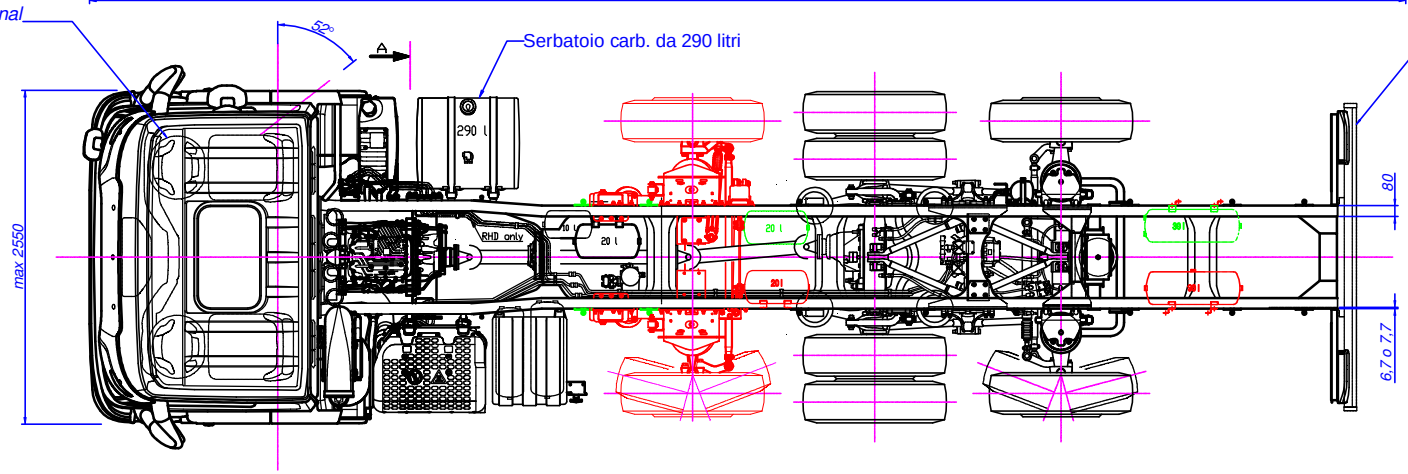

Vista A/ View A

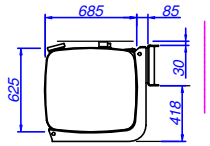

Nota (*): vedere scheda informativa
Note (*): see information document

Varianti/variants	Versioni/versions	A	B
???	??CB????????????P?? ?	3135	1365
???	??CB????????????Q?? ?	3180	1320
???	??CB????????????R?? ?	3090	1410

Tightening tolerance - ISO4	ISO 2768 - ---- Tolerancing ISO 8015	Author A. TIBALDO	Date 31/01/2020	Scale 1:20
S.T. System Truck S.p.A. Via Piave, 28 - I-46048 Roverbella (MN) Tel. +39 0376 696008 www.stsystemtruck.com	All proprietary rights reserved by S.T. System Truck S.p.A. The reproduction, distribution and utilization of this document as well as the communication of its contents to others without express authorization is prohibited (see ISO 16016:2016)	Description FIGURINO IVECO X-WAY AD/AT280X Y/PS ON - FILTRO COMPATTO O SOTTO-CABINA - CONF. 1+3 - PASSO 4500 MM		
		Code 55.01.03.0170	Drawing 55.01.03.0170	Sheet 2/2 Format A1

E24*13R11/18*0056*02

Disegno per omologazione
Drawing for type-approval

Varianti/variants	Versioni/versions	A	B
4CS	??EB?????????????P?? ?	3435	1365
4CS	??EB?????????????Q?? ?	3480	1320
4CS	??EB?????????????R?? ?	3390	1410

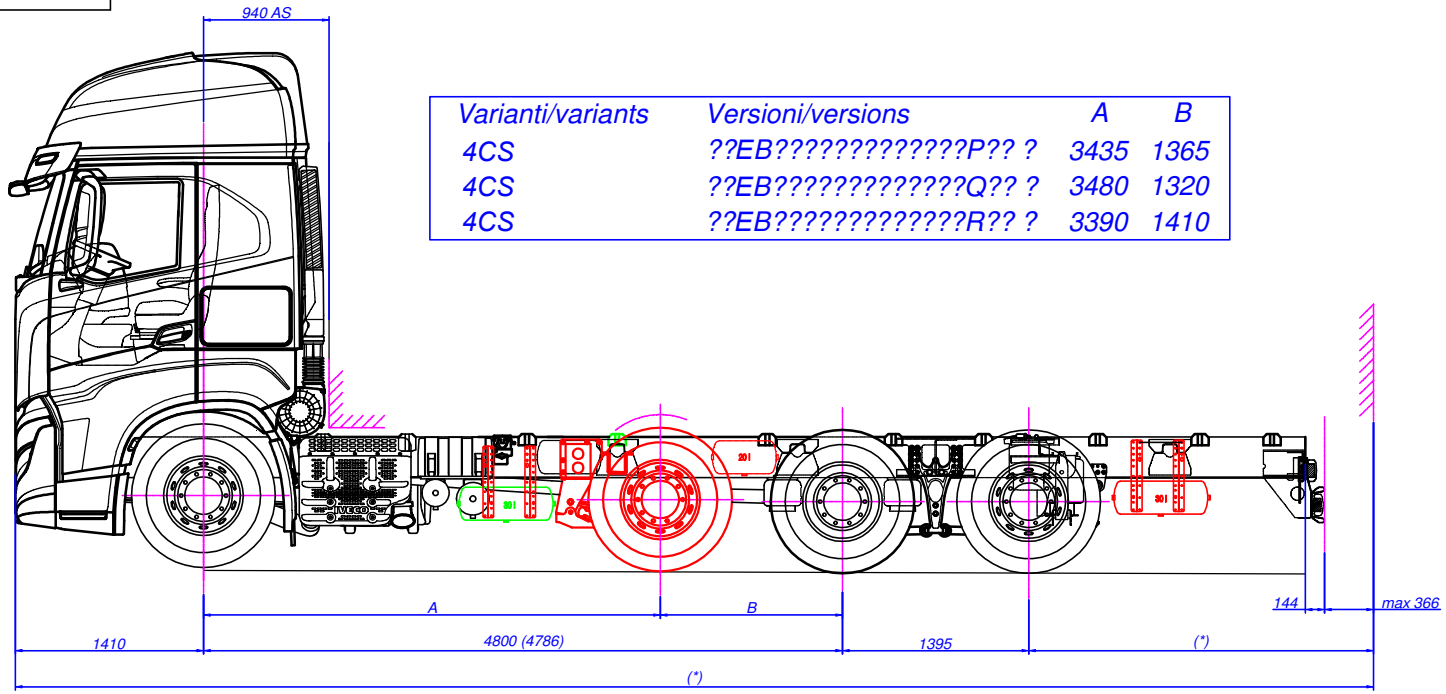

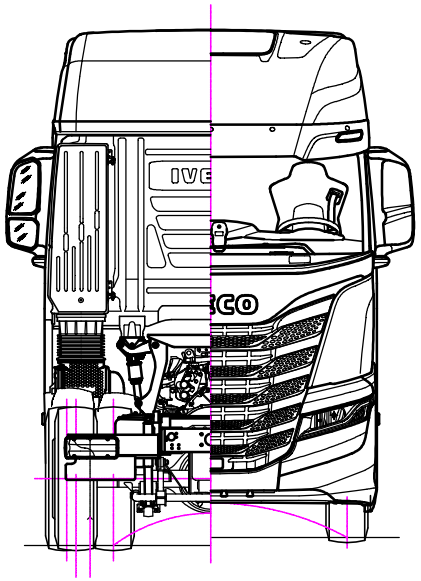

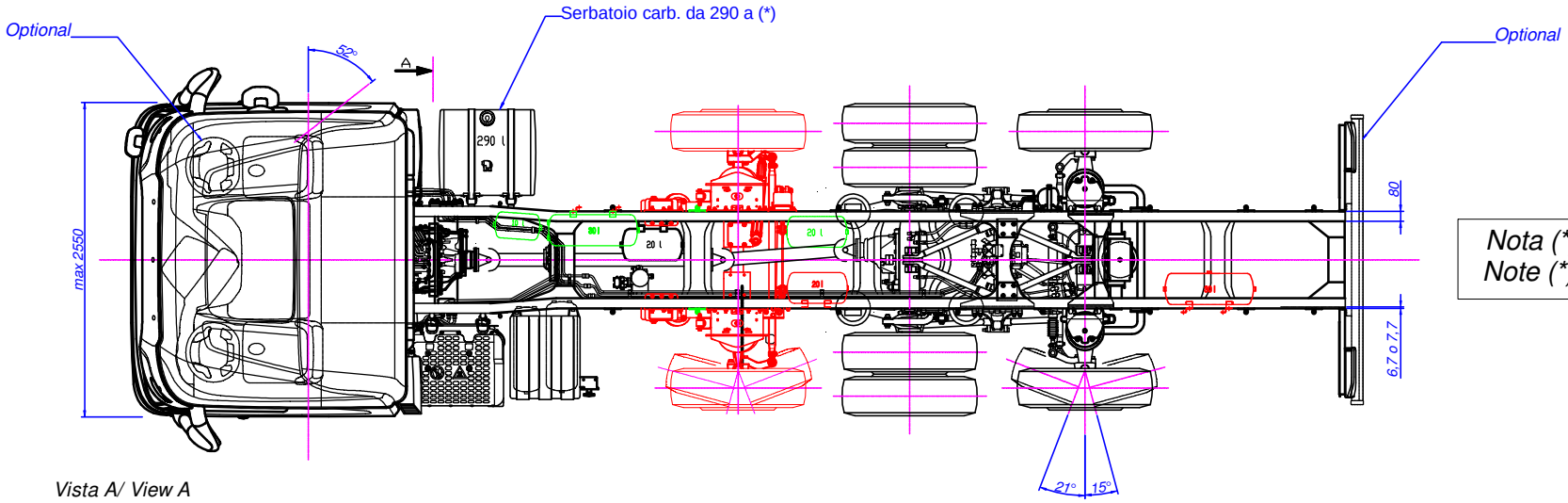

Vista A/ View A

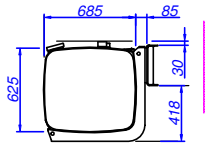

Nota (*): vedere scheda informativa
Note (*): see information document

Tightening tolerance - 1004	ISO 2768 - ---- Tolerancing ISO 8015	Author: A. TIBALDO	Date: 31/01/2020	Scale: 1:20
S.T. System Truck S.p.A. Via Piave, 28 - I-46048 Roverbella (MN) Tel. +39 0376 696008 www.stsystemtruck.com	All proprietary rights reserved by S.T. System Truck S.p.A. The reproduction, distribution and utilisation of this document as well as the communication of its contents to others without express authorisation is prohibited (see ISO 16016:2016)	Description: FIGURINO IVECO X-WAY AS280X Y/PS ON CONF. 1+3 - PASSO 4800 MM		
		Code: 55.01.03.0177	Drawing: 55.01.03.0177	Sheet: 1/1 Format: A1

E24*13R11/18*0056*02

Disegno per omologazione
Drawing for type-approval

Varianti/variants	Versioni/versions	A	B
???	??CB?????????????P?? ?	3435	1365
???	??CB?????????????Q?? ?	3480	1320
???	??CB?????????????R?? ?	3390	1410

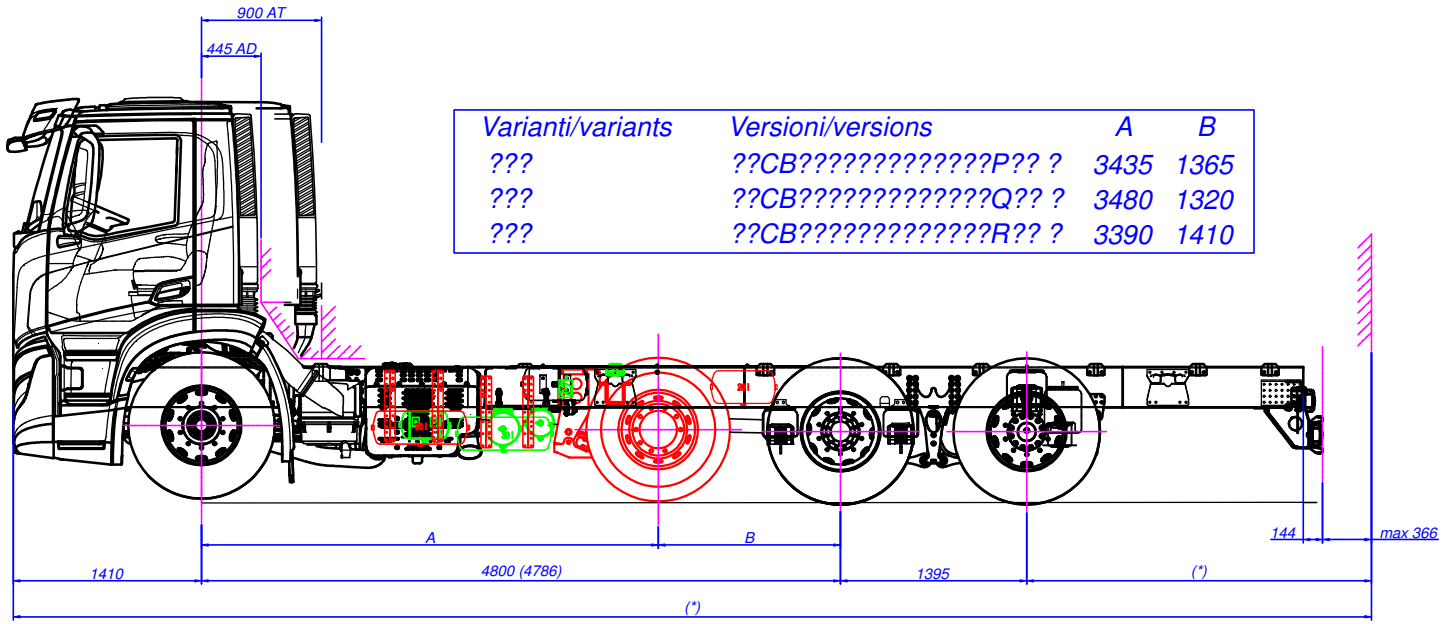

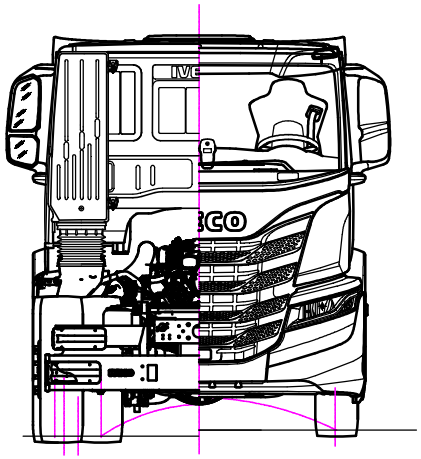

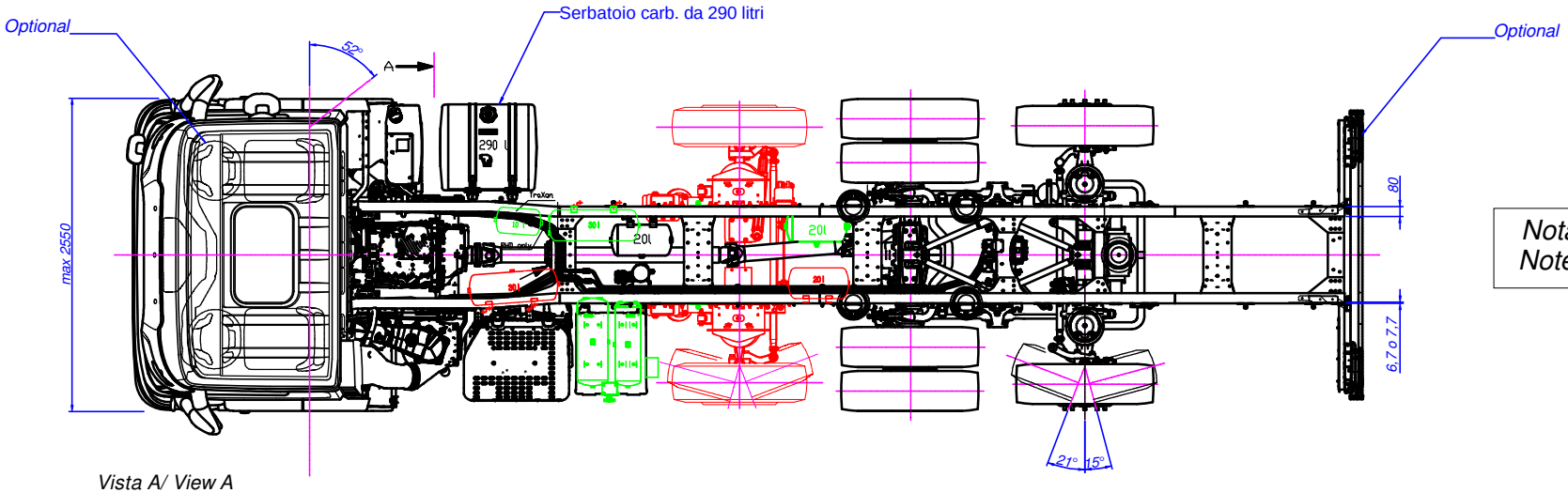

Nota (*): vedere scheda informativa
Note (*): see information document

Vista A/ View A

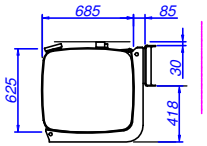

Tightening tolerance – 1004	ISO 2768 - ---- Tolerancing ISO 8015	Author A. TIBALDO	Date 31/01/2020		Scale 1:20
S.T. System Truck S.p.A. Via Piasta, 28 - I 46048 Roverbella (MN) Tel. +39 0376 696011 www.stsystemtruck.com	All proprietary rights reserved by S.T. System Truck S.p.A. The reproduction, distribution and utilization of this document as well as the communication of its contents to others without express authorization is prohibited (see ISO 16016:2016)	Description FIGURINO IVECO X-WAY AD/AT280X Y/PS ON FILTRO STANDARD – CONF. 1+3 – PASSO 4800 MM			
		Code 55.01.03.0171	Drawing 55.01.03.0171	Sheet 1/2	Format A1

E24*13R11/18*0056*02

Disegno per omologazione
Drawing for type-approval

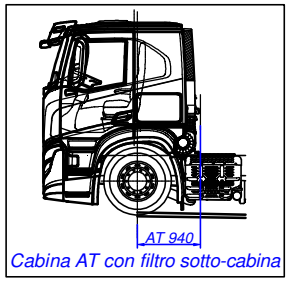

Cabina AT con filtro sotto-cabina

Configurazione valida anche per veicolo con cabina AT e filtro sotto-cabina (vedi dettaglio)

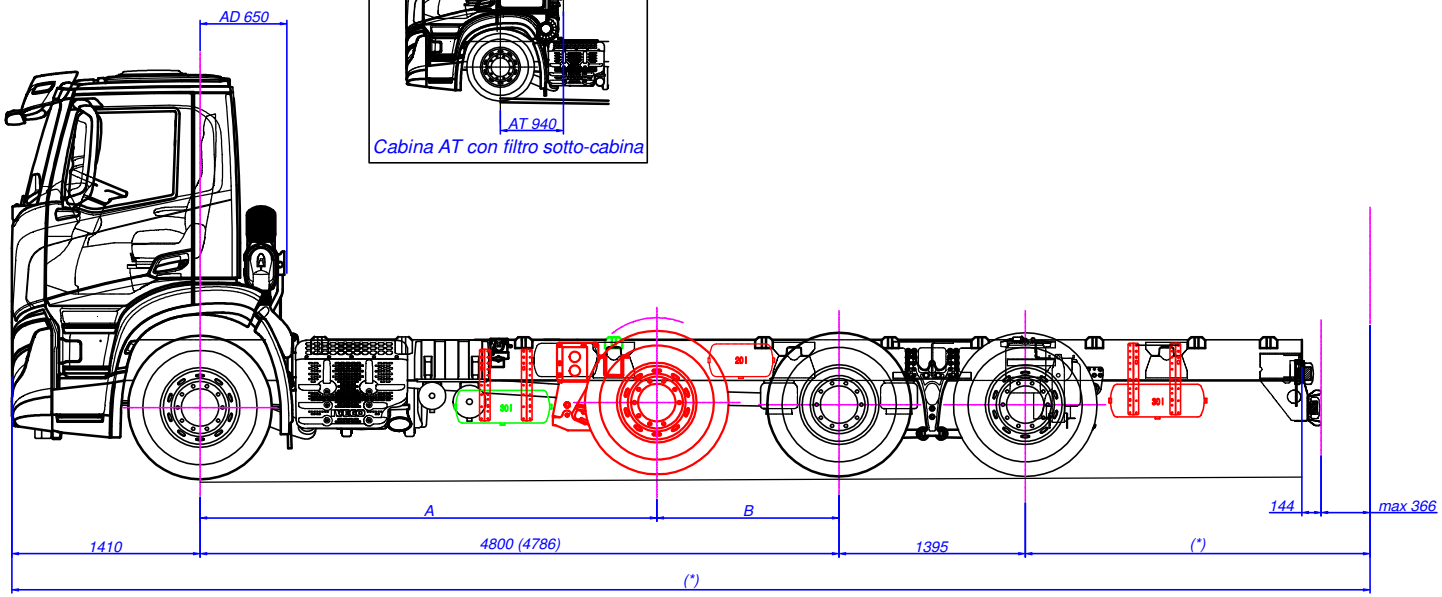

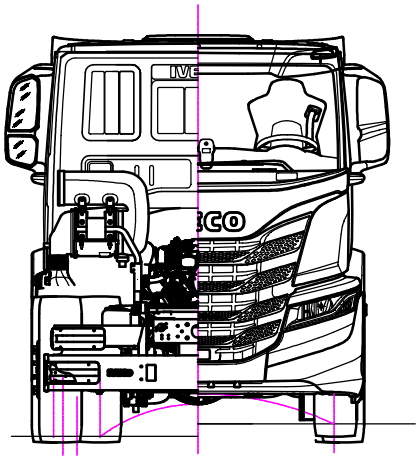

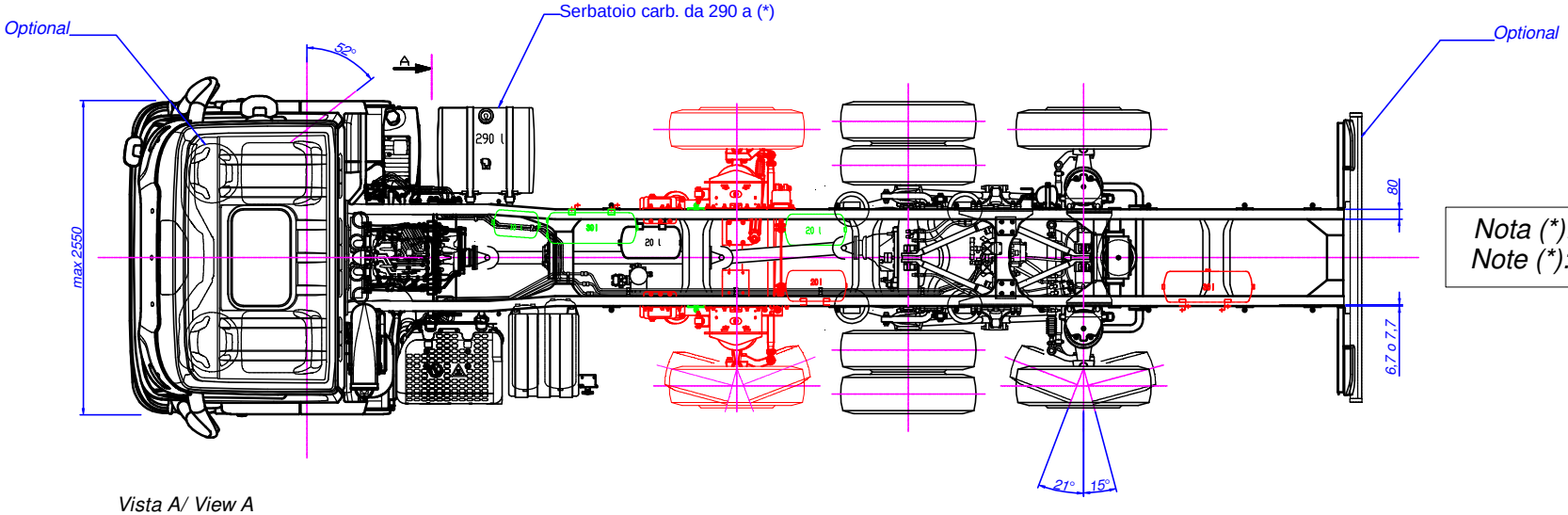

Nota (*): vedere scheda informativa
Note (*): see information document

Vista A/ View A

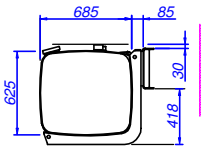

Varianti/variants	Versioni/versions	A	B
???	??CB?????????????P?? ?	3435	1365
???	??CB?????????????Q?? ?	3480	1320
???	??CB?????????????R?? ?	3390	1410

Tightening tolerance - ISO4	ISO 2768 - ---- Tolerancing ISO 8015	Author A. TIBALDO	Date 31/01/2020	Scale 1:20
S.T. System Truck S.p.A. Via Piazza, 28 - I 46048 Roverbella (MN) Tel. +39 0376 696009 www.stsystemtruck.com		Description FIGURINO IVECO X-WAY AD/AT280X Y/PS ON - FILTRO COMPATTO O SOTTO-CABINA - CONF. 1+3 - PASSO 4800 MM		
		Code 55.01.03.0171	Drawing 55.01.03.0171	Sheet 2/2 Format A1

E24*13R11/18*0056*02

Disegno per omologazione
Drawing for type-approval

Varianti/variants	Versioni/versions	A	B
4CS	??FB?????????????P?? ?	3735	1365
4CS	??FB?????????????Q?? ?	3780	1320
4CS	??FB?????????????R?? ?	3690	1410

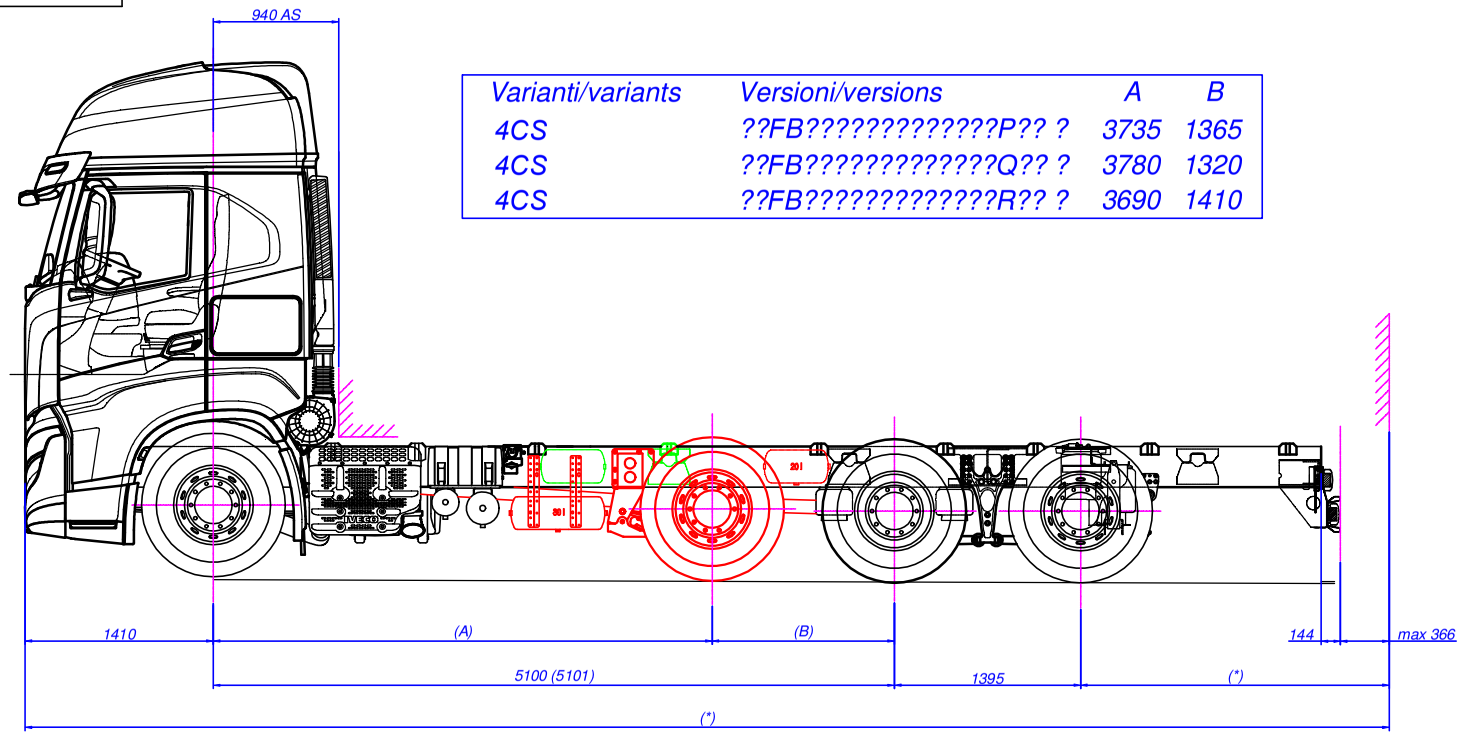

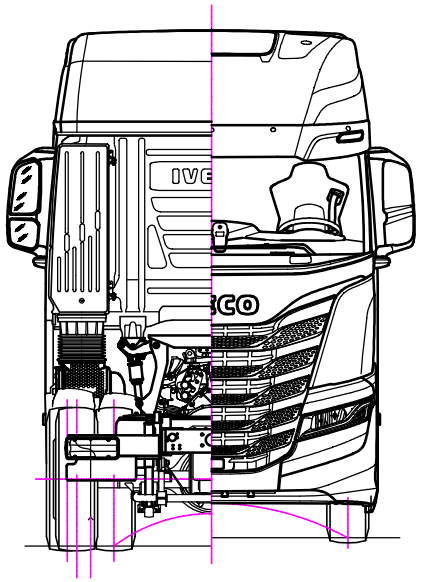

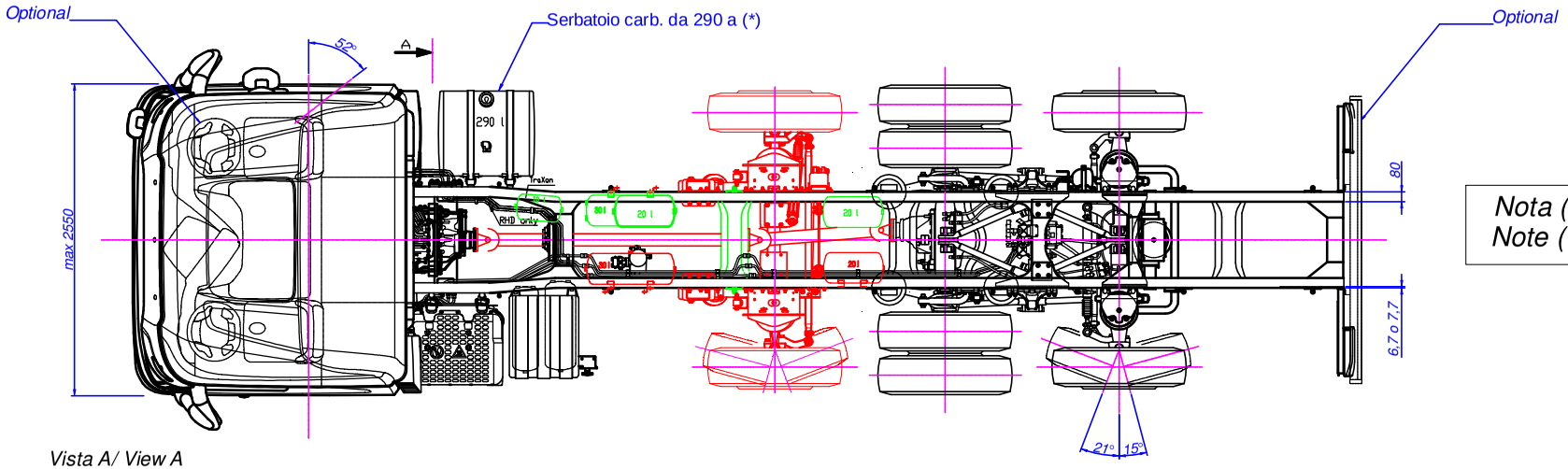

Nota (*): vedere scheda informativa
Note (*): see information document

Vista A/ View A

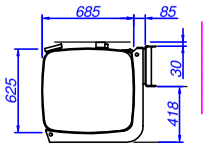

Tightening tolerance – ISO 4	ISO 2768 – ---- Tolerancing ISO 8015	Author: A.TIBALDO	Date: 31/01/2020		Scale: 1:20
S.T. System Truck S.p.A. Via Parisa, 28 – I-46048 Roverbella (MN) Tel. +39 0376 696809 www.stsystemtruck.com	All proprietary rights reserved by ST System Truck S.p.A. The reproduction, distribution and utilization of this document as well as the communication of its contents to others without express authorization is prohibited (see ISO 16016:2016).	Description: FIGURINO IVECO X-WAY AS280X Y/PS ON CONF. 1+3 – PASSO 5100 MM			
		Code: 55.01.03.0178	Drawing: 55.01.03.0178	Sheet: 1/1	Format: A1

E24*13R11/18*0056*02

Disegno per omologazione
Drawing for type-approval

Varianti/variants	Versioni/versions	A	B
???	??CB?????????????P?? ?	3735	1365
???	??CB?????????????Q?? ?	3780	1320
???	??CB?????????????R?? ?	3690	1410

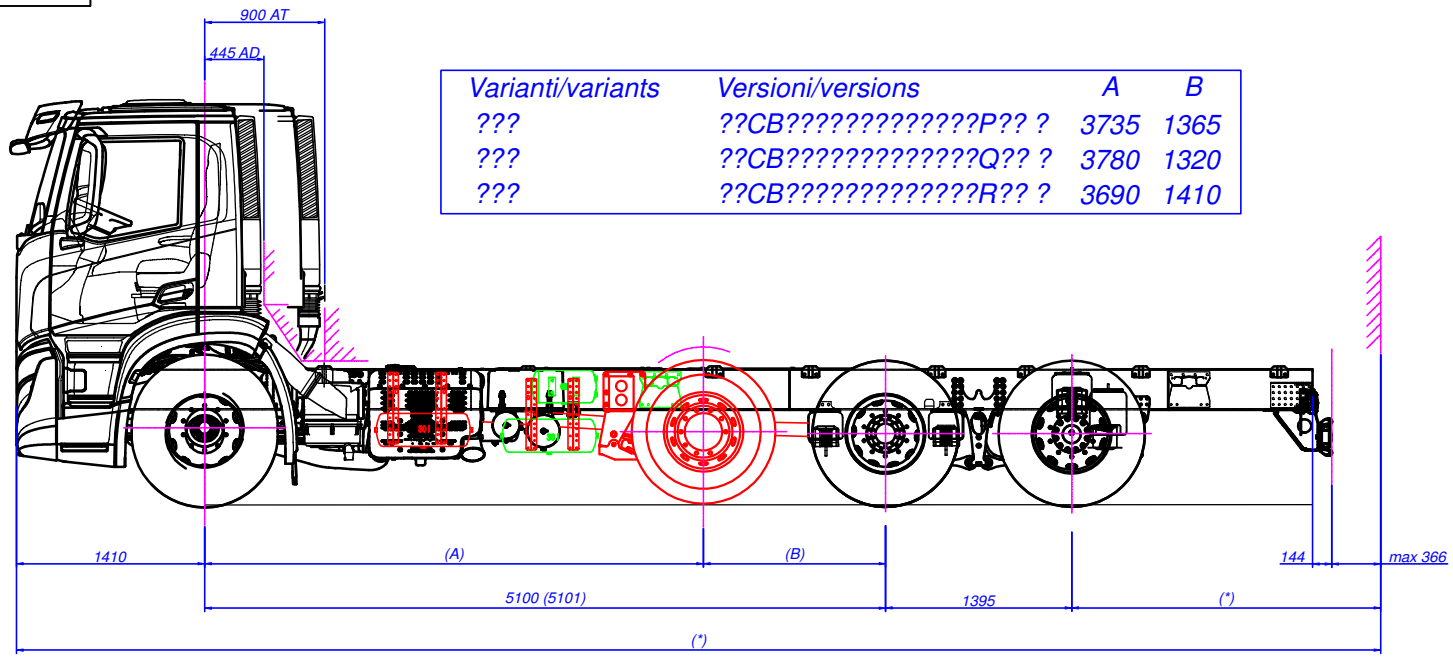

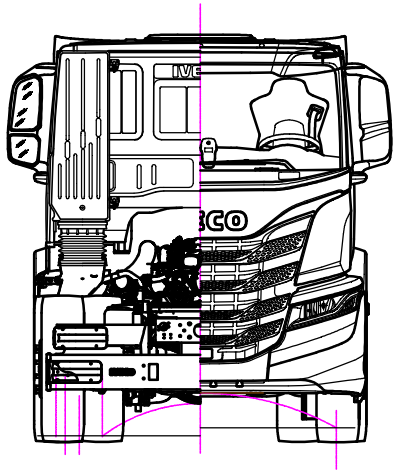

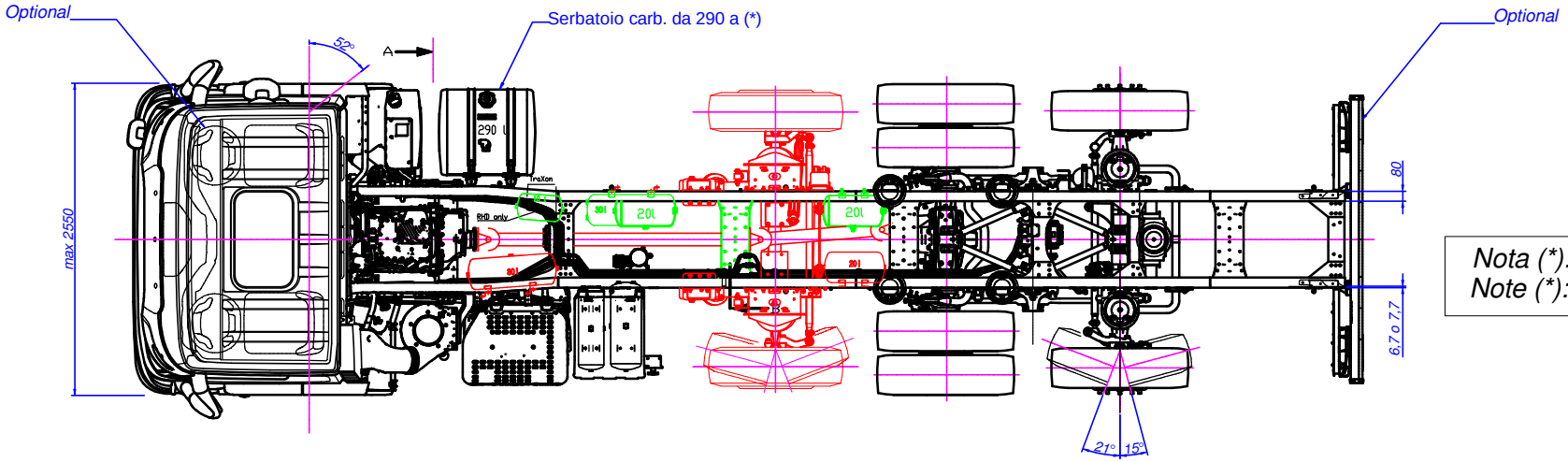

Nota (*): vedere scheda informativa
Note (*): see information document

Vista A/ View A

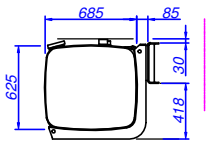

Tightening tolerance - 1004	ISO 2768 - ---- Tolerancing ISO 8015	Author A. TIBALDO	Date 31/01/2020	Scale 1:20
S.T. System Truck S.p.A. Via Piave, 28 - I-46048 Roverbella (MN) Tel. +39 0376 696008 www.stsystemtruck.com	All proprietary rights reserved by S.T. System Truck S.p.A. The reproduction, distribution and utilization of this document as well as the communication of its contents to others without express authorization is prohibited (see ISO 16016:2016)	Description FIGURINO IVECO X-WAY AD/AT280X Y/PS ON FILTRO STANDARD - CONF. 1+3 - PASSO 5100 MM		
		Code 55.01.03.0172	Drawing 55.01.03.0172	Sheet 1/2 Format A1

E24*13R11/18*0056*02

Disegno per omologazione
Drawing for type-approval

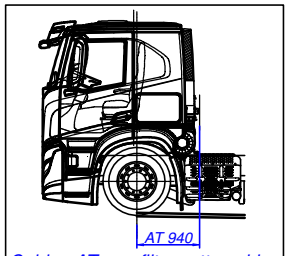

Cabina AT con filtro sotto-cabina

Configurazione valida anche per veicolo con cabina AT e filtro sotto-cabina (vedi dettaglio)

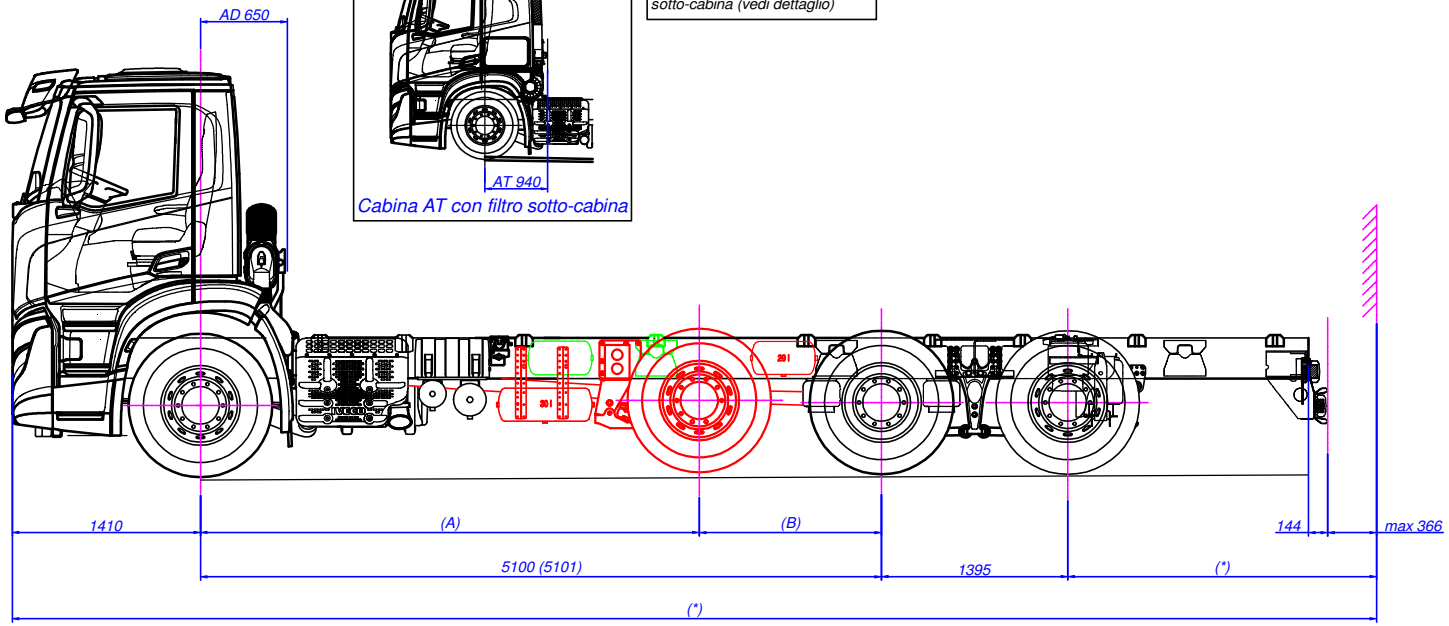

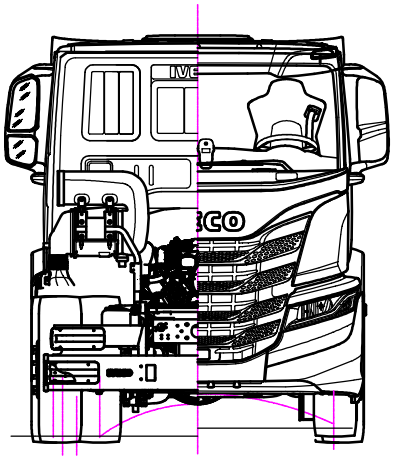

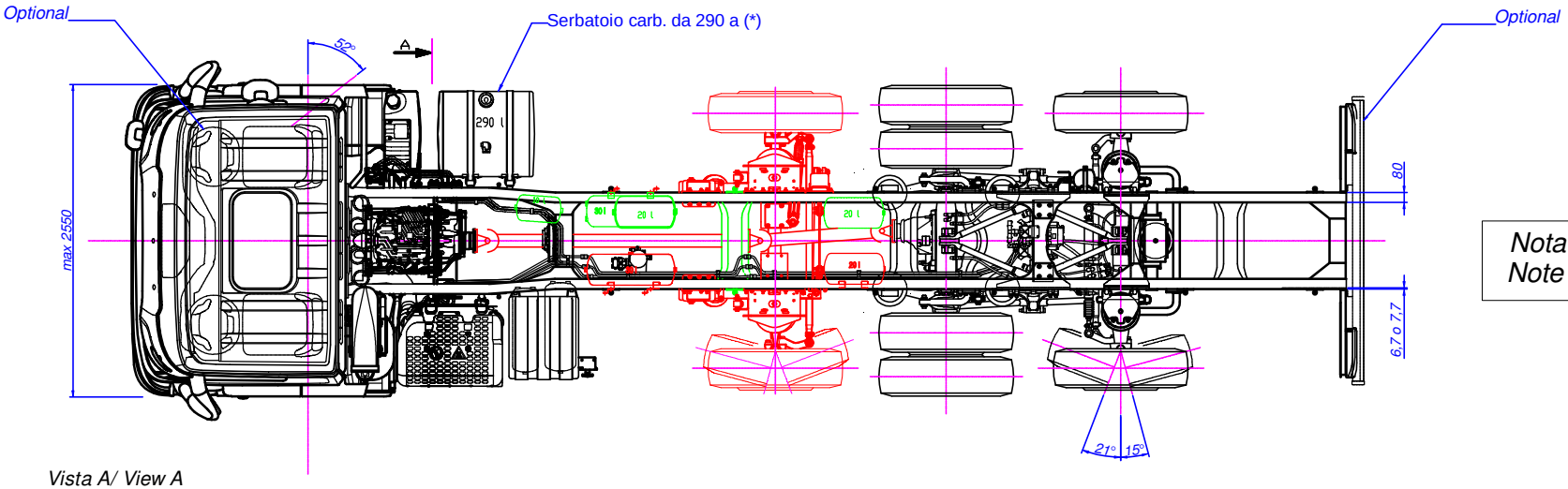

Vista A/ View A

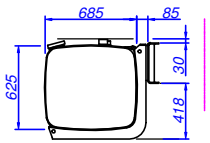

Nota (*): vedere scheda informativa
Note (*): see information document

Varianti/variants	Versioni/versions	A	B
???	??CB?????????????P?? ?	3735	1365
???	??CB?????????????Q?? ?	3780	1320
???	??CB?????????????R?? ?	3690	1410

Tightening tolerance - ISO4	ISO 2768 - ---- Tolerancing ISO 8015	Author A. TIBALDO	Date 31/01/2020	Scale 1:20
S.T. System Truck S.p.A. Via Piasta, 28 - I-46048 Roverbella (MN) Tel. +39 0376 696008 www.stsystemtruck.com	All proprietary rights reserved by S.T. System Truck S.p.A. The reproduction, distribution and utilisation of this document as well as the communication of its contents to others without express authorisation is prohibited (see ISO 16016:2016)	Description FIGURINO IVECO X-WAY AD/AT280X Y/PS ON - FILTRO COMPATTO O SOTTO-CABINA - CONF. 1+3 - PASSO 5100 MM		
		Code 55.01.03.0172	Drawing 55.01.03.0172	Sheet 2/2 Format A1

E24*13R11/18*0056*02

Disegno per omologazione
Drawing for type-approval

Varianti/variants	Versioni/versions	A	B
4CS	??GB?????????????P?? ?	4335	1365
4CS	??GB?????????????Q?? ?	4380	1320
4CS	??GB?????????????R?? ?	4290	1410

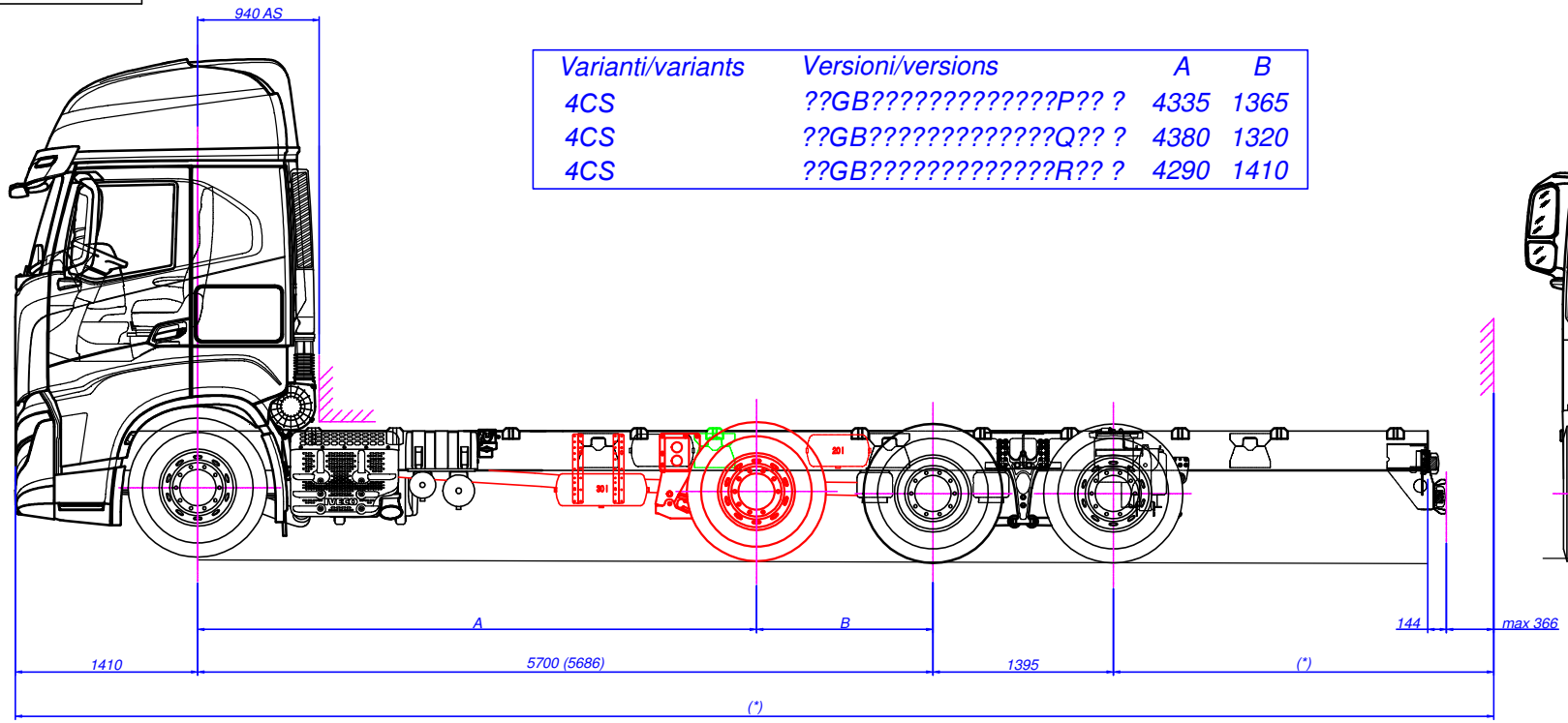

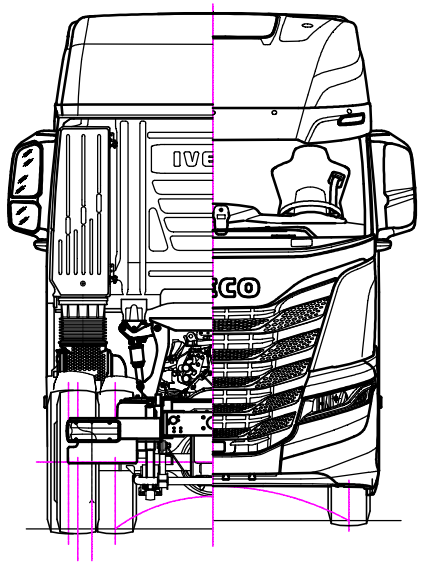

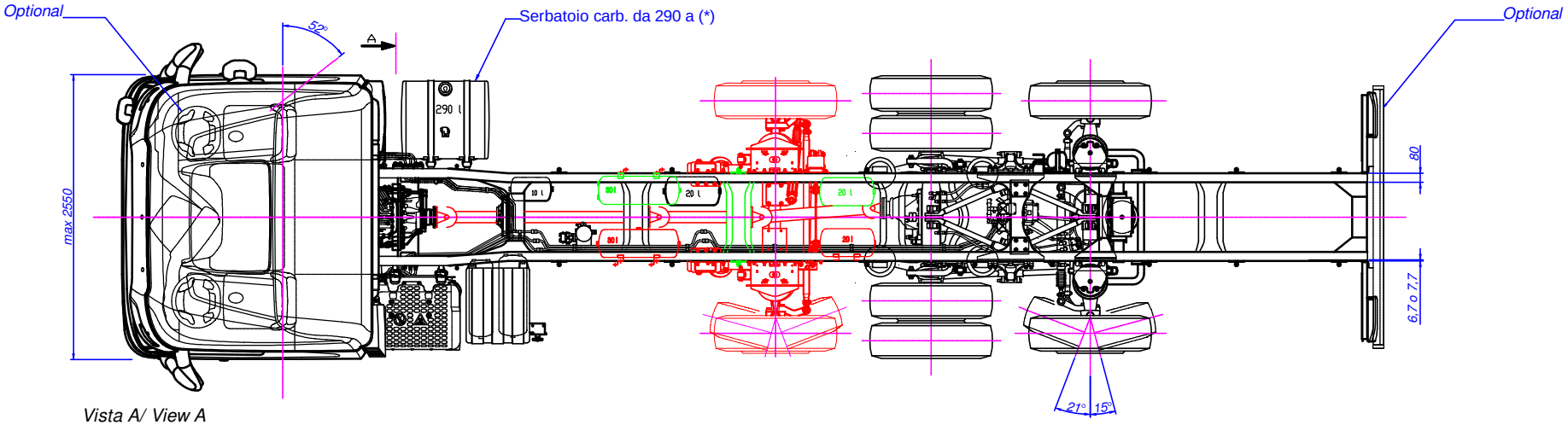

Vista A/ View A

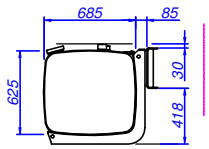

Nota (*): vedere scheda informativa
Note (*): see information document

Tightening tolerance - 1004	ISO 2768 - ---- Tolerancing ISO 8015	Author: A. TIBALDO	Date: 31/01/2020	Scale: 1:20
S.T. System Truck S.p.A. Via Piasta, 28 - I-46048 Roverbella (MN) Tel. +39 0376 696008 www.stsystemtruck.com	All proprietary rights reserved by S.T. System Truck S.p.A. The reproduction, distribution and utilisation of this document as well as the communication of its contents to others without express authorisation is prohibited (see ISO 16016:2016)	Description: FIGURINO IVECO X-WAY AS280X Y/PS ON CONF. 1+3 - PASSO 5700 MM		
		Code: 55.01.03.0179	Drawing: 55.01.03.0179	Sheet: 1/1 Format: A1

E24*13R11/18*0056*02

Disegno per omologazione
Drawing for type-approval

Varianti/variants	Versioni/versions	A	B
???	??CB?????????????P?? ?	4335	1365
???	??CB?????????????Q?? ?	4380	1320
???	??CB?????????????R?? ?	4290	1410

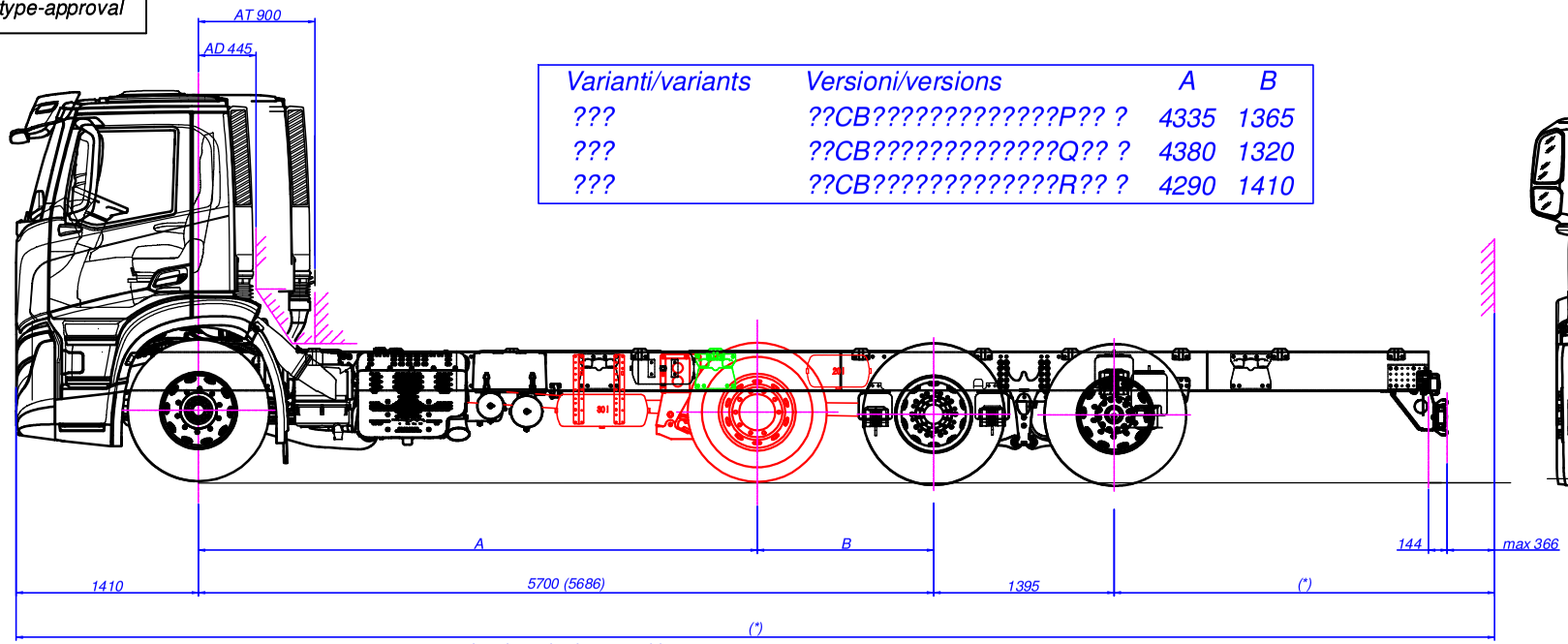

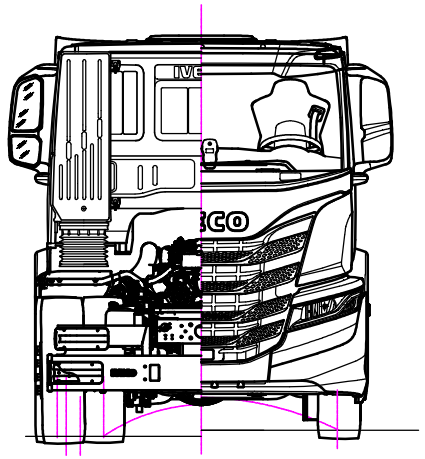

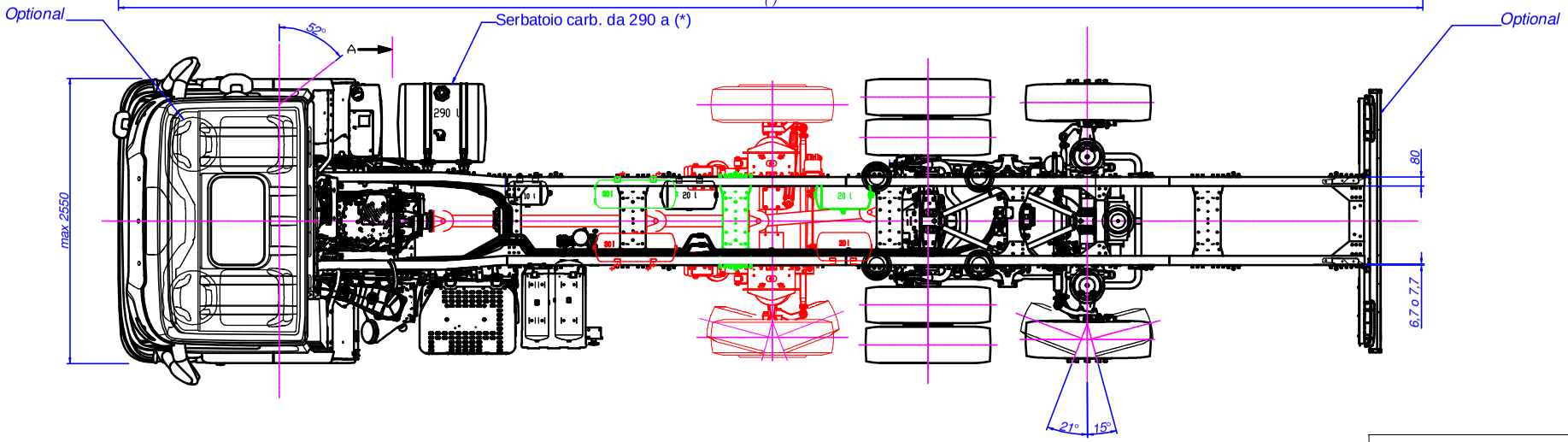

Nota (*): vedere scheda informativa
Note (*): see information document

Vista A/ View A

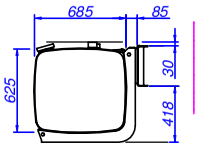

Tightening tolerance - ISO 4	ISO 2768 - ---- Tolerancing ISO 8015	Author: A. TIBALDO	Date: 31/01/2020	Scale: 1:20
S.T. System Truck S.p.A. Via Piersa, 28 - I 46048 Roverbella (MN) Tel. +39 0376 696809 www.stsystemtruck.com	All proprietary rights reserved by ST System Truck S.p.A. The reproduction, distribution and utilization of this document as well as the communication of its contents to others without express authorization is prohibited (see ISO 16016:2016).	Description: FIGURINO IVECO X-WAY AD/AT280X Y/PS ON FILTRO STANDARD - CONF. 1+3 - PASSO 5700 MM		
		Code: 55.01.03.0173	Drawing: 55.01.03.0173	Sheet: 1/2 Format: A1

E24*13R11/18*0056*02

Disegno per omologazione
Drawing for type-approval

Configurazione valida anche per veicolo con cabina AT e filtro sotto-cabina (vedi dettaglio)

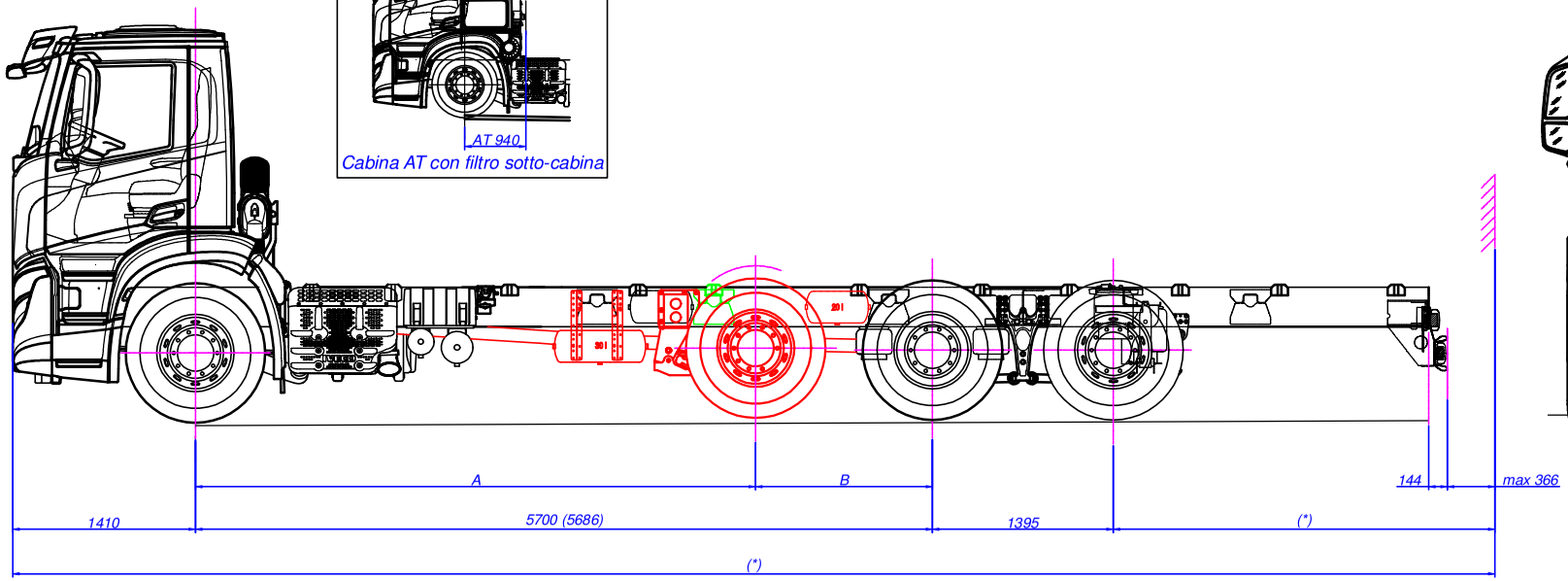

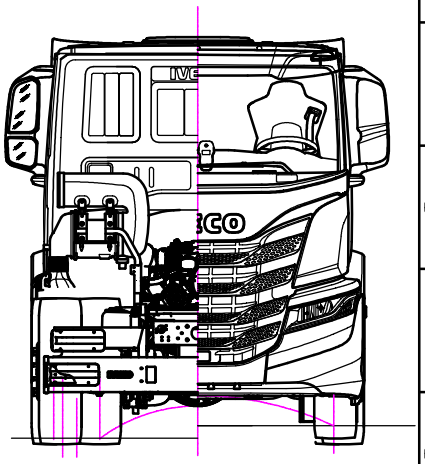

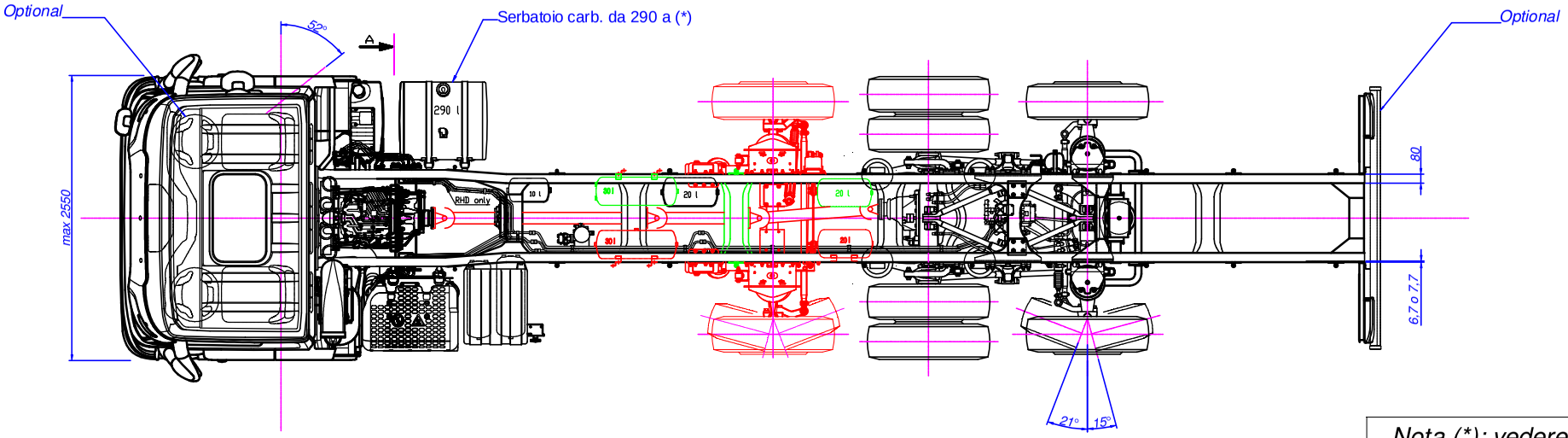

Vista A/ View A

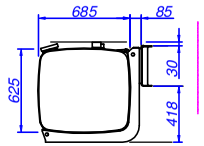

Nota (*): vedere scheda informativa
Note (*): see information document

Varianti/variants	*Versioni/versions*	*A*	*B*
???	*??CB????????????P?? ?*	*4335*	*1365*
???	*??CB????????????Q?? ?*	*4380*	*1320*
???	*??CB????????????R?? ?*	*4290*	*1410*

Tightening tolerance - ISO 4	ISO 2768 - ---- Tolerancing ISO 8015	Author A.TIBALDO	Date 31/01/2020	Scale 1:20
S.T. System Truck S.p.A. Via Piersa, 28 - I-46048 Roverbella (MN) Tel. +39 0376 696809 www.stsystemtruck.com	All proprietary rights reserved by ST System Truck S.p.A. The reproduction, distribution and utilization of this document as well as the communication of its content to others without express authorization is prohibited (see ISO 16016:2016).	Description FIGURINO IVECO X-WAY AD/AT280X Y/PS ON - FILTRO COMPATTO SOTTO-CABINA - CONF. 1+3 - PASSO 5700 MM		
		Code 55.01.03.0173	Drawing 55.01.03.0173	Sheet 2/2 Format A1

E24*13R11/18*0056*02

Disegno per omologazione
Drawing for type-approval

Varianti/variants	Versioni/versions	A	B
4CS	??HB?????????????P?? ?	4685	1365
4CS	??HB?????????????Q?? ?	4730	1320
4CS	??HB?????????????R?? ?	4640	1410

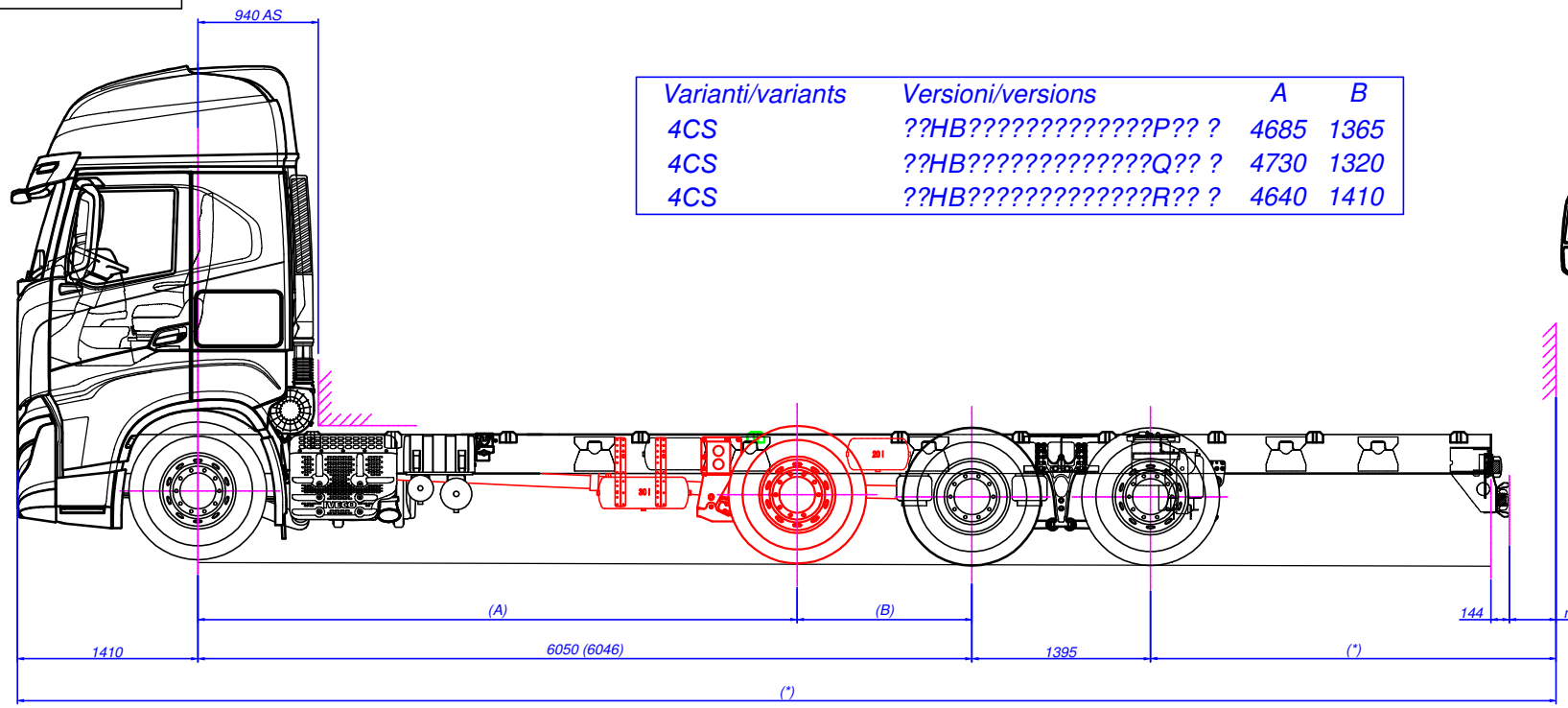

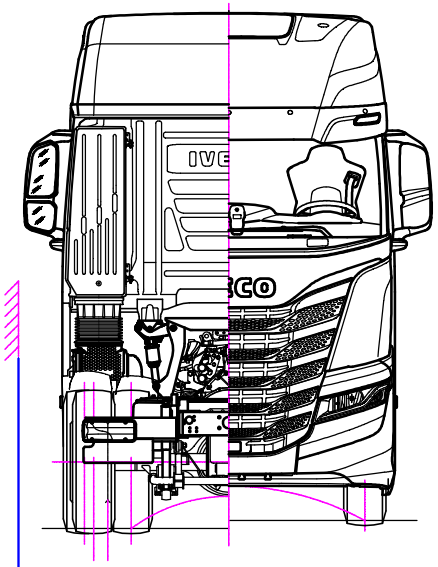

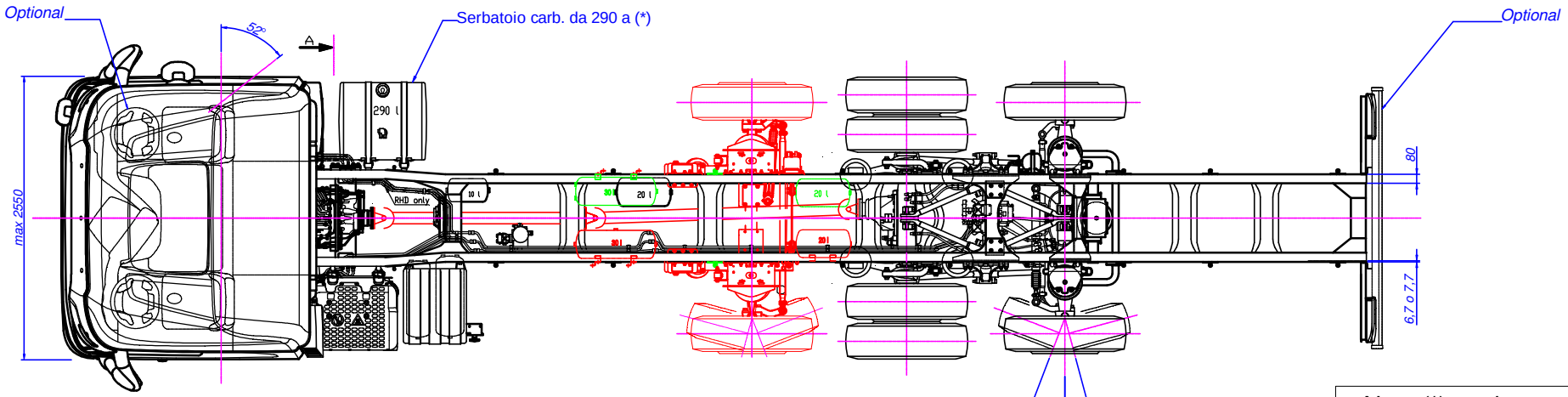

Vista A/ View A

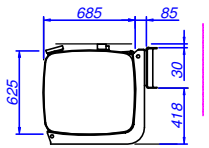

Nota (*): vedere scheda informativa
Note (*): see information document

Tightening tolerance - ISO4	ISO 2768 - ---- Tolerancing ISO 8015	Author A. TIBALDO	Date 31/01/2020		Scale 1:20
S.T. System Truck S.p.A. Via Piave, 28 - I 46048 Roverbella (MN) Tel. +39 0376 696008 www.stsystemtruck.com	All proprietary rights reserved by S.T. System Truck S.p.A. The reproduction, distribution and utilisation of this document as well as the communication of its contents to others without express authorisation is prohibited (see ISO 16016:2016)	Description FIGURINO IVECO X-WAY AS280X Y/PS ON CONF. 1+3 - PASSO 6050 MM			
		Code 55.01.03.0180	Drawing 55.01.03.0180	Sheet 1/1	Format A1

E24*13R11/18*0056*02

Disegno per omologazione
Drawing for type-approval

Varianti/variants	Versioni/versions	A	B
???	??CB?????????????P?? ?	4685	1365
???	??CB?????????????Q?? ?	4730	1320
???	??CB?????????????R?? ?	4640	1410

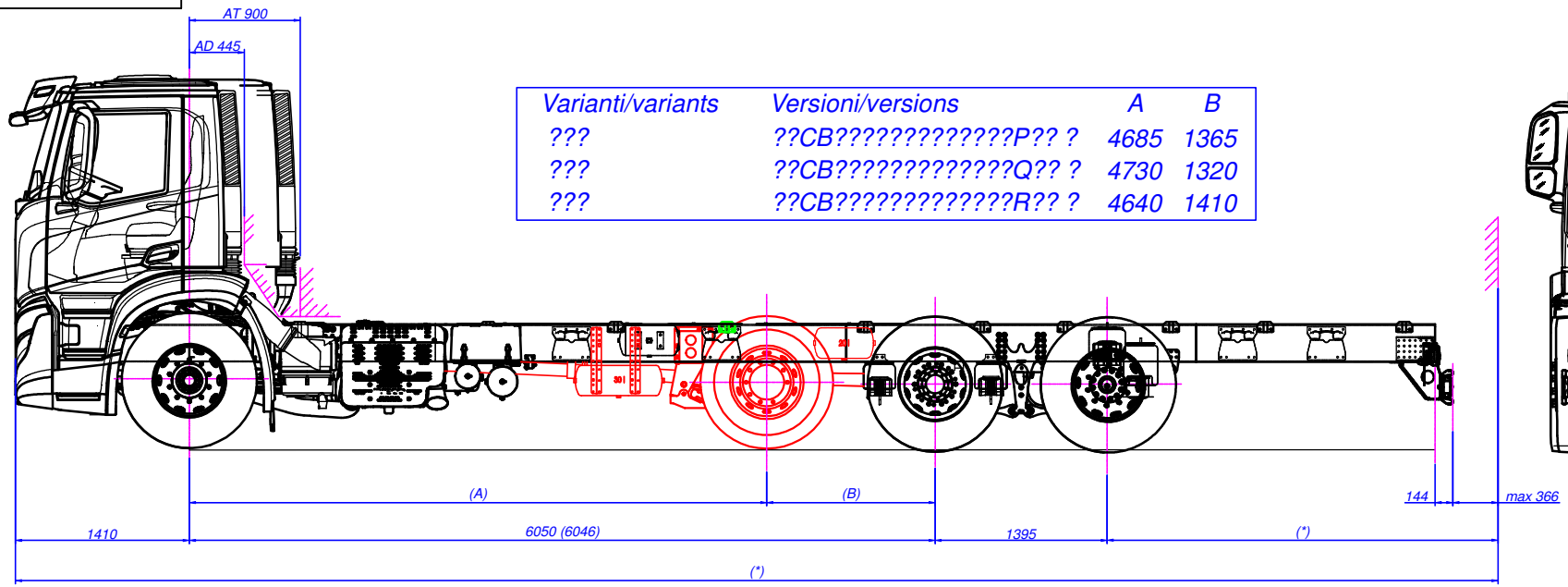

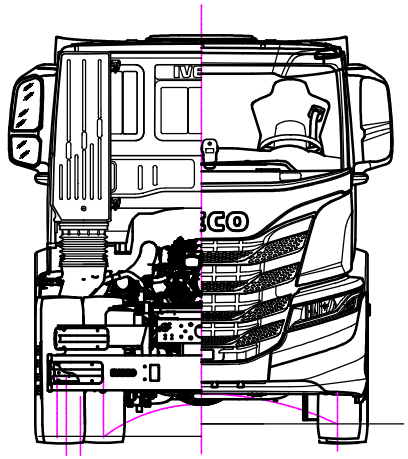

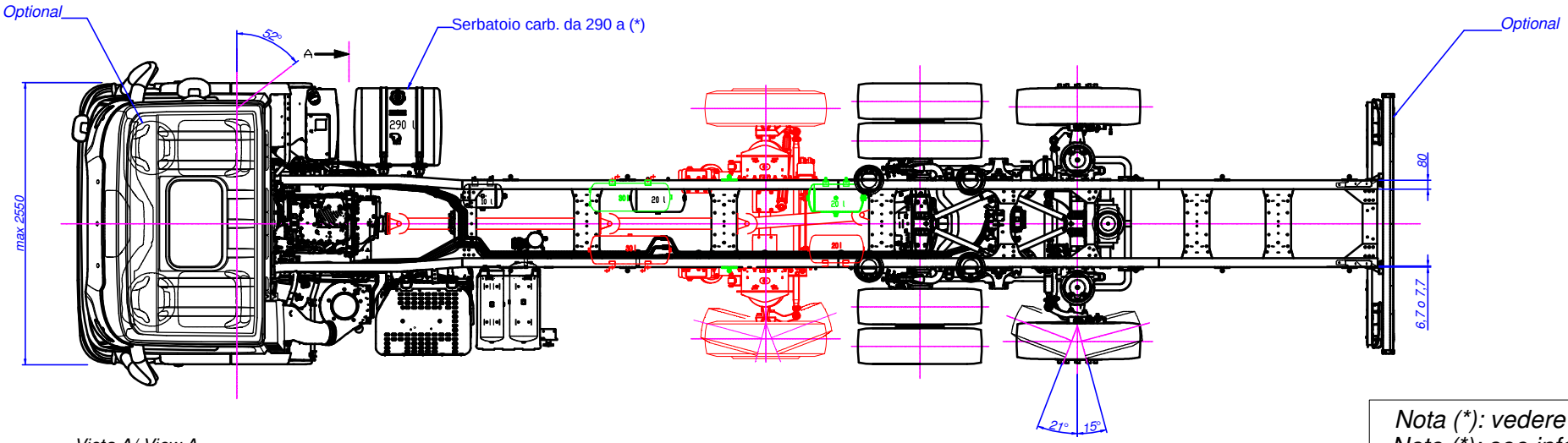

Vista A/ View A

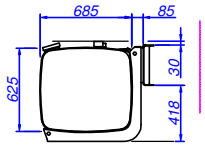

Nota (*): vedere scheda informativa
Note (*): see information document

Tightening tolerance - ISO4	ISO 2768 - ---- Tolerancing ISO 8015	Author A. TIBALDO	Date 31/01/2020	Scale 1:20
S.T. System Truck S.p.A. Via Piave, 28 - I-46048 Roverbella (MN) Tel. +39 0376 696016 www.stsystemtruck.com	All proprietary rights reserved by S.T. System Truck S.p.A. The reproduction, distribution and utilisation of this document as well as the communication of its contents to others without express authorisation is prohibited (see ISO 16016:2016)	Description FIGURINO IVECO X-WAY AD/AT280X Y/PS ON FILTRO STANDARD – CONF. 1+3 - PASSO 6050 MM		
		Code 55.01.03.0174	Drawing 55.01.03.0174	Sheet 1/2 Format A1

E24*13R11/18*0056*02

Disegno per omologazione
Drawing for type-approval

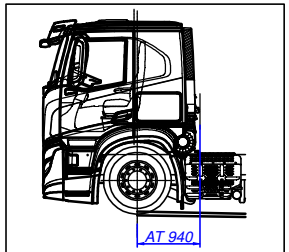

Cabina AT con filtro sotto-cabina

Configurazione valida anche per veicolo con cabina AT e filtro sotto-cabina (vedi dettaglio)

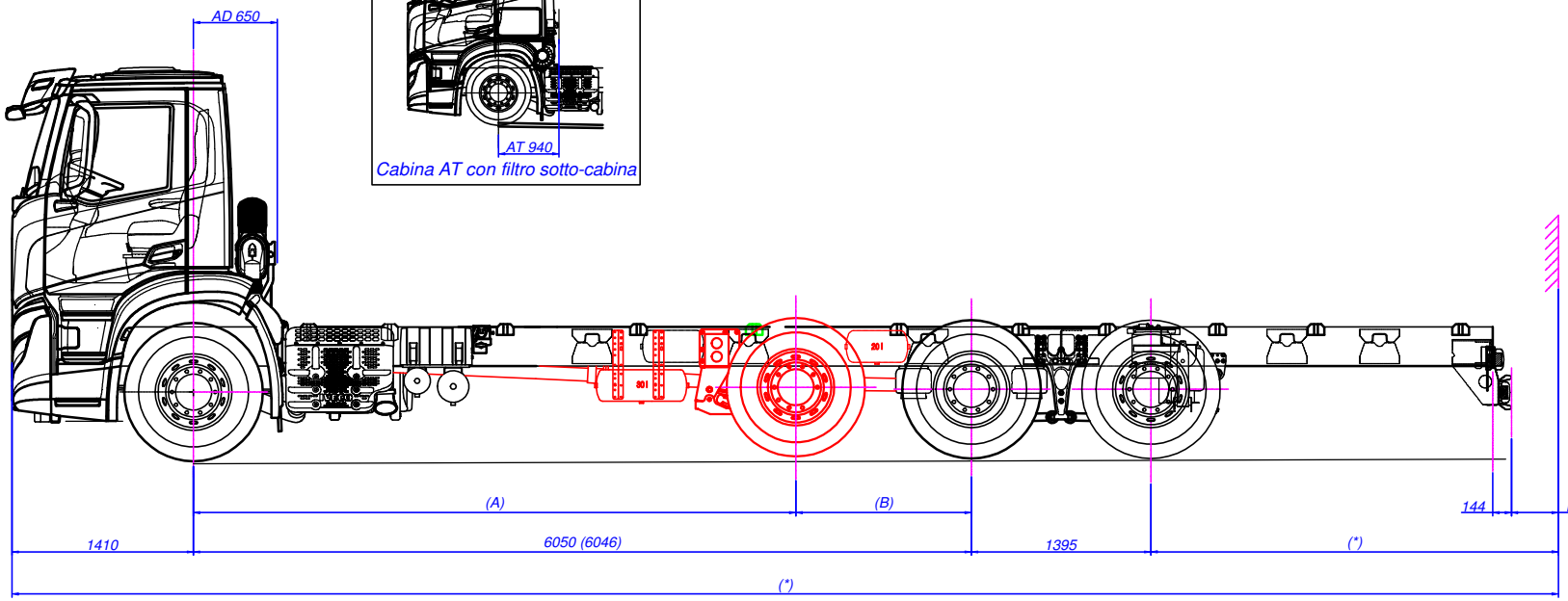

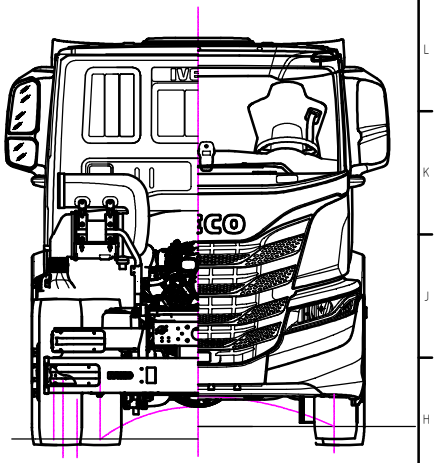

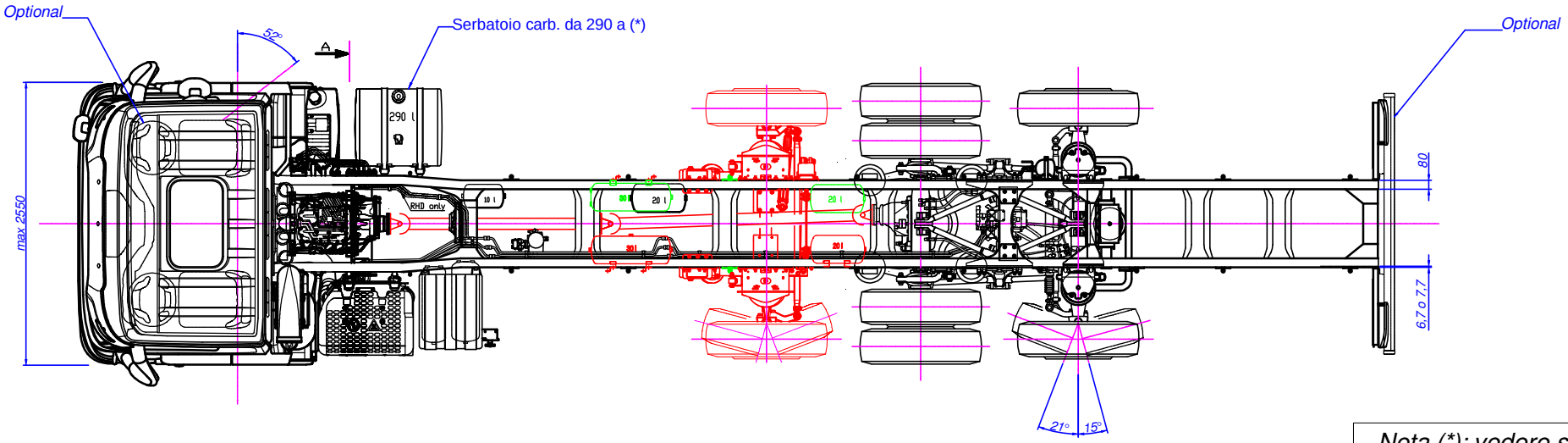

Vista A/ View A

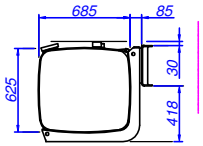

Varianti/variants	Versioni/versions	A	B
???	??CB?????????????P?? ?	4685	1365
???	??CB?????????????Q?? ?	4730	1320
???	??CB?????????????R?? ?	4640	1410

Nota (*): vedere scheda informativa
Note (*): see information document

Tightening tolerance - ISO4	ISO 2768 - ---- Tolerancing ISO 8015	Author: A. TIBALDO	Date: 31/01/2020	Scale: 1:20
S.T. System Truck S.p.A. Via Piave, 28 - I-46048 Roverbella (MN) Tel. +39 0376 696008 www.stsystemtruck.com	All proprietary rights reserved by S.T. System Truck S.p.A. The reproduction, distribution and utilisation of this document as well as the communication of its contents to others without express authorisation is prohibited (see ISO 16016:2016)	Description: FIGURINO IVECO X-WAY AD/AT280X Y/PS ON - FILTRO COMPATTO O SOTTO-CABINA - CONF. 1+3 - PASSO 6050 MM		
		Code: 55.01.03.0174	Drawing: 55.01.03.0174	Sheet: 2/2 Format: A1

E24*13R11/18*0056*02

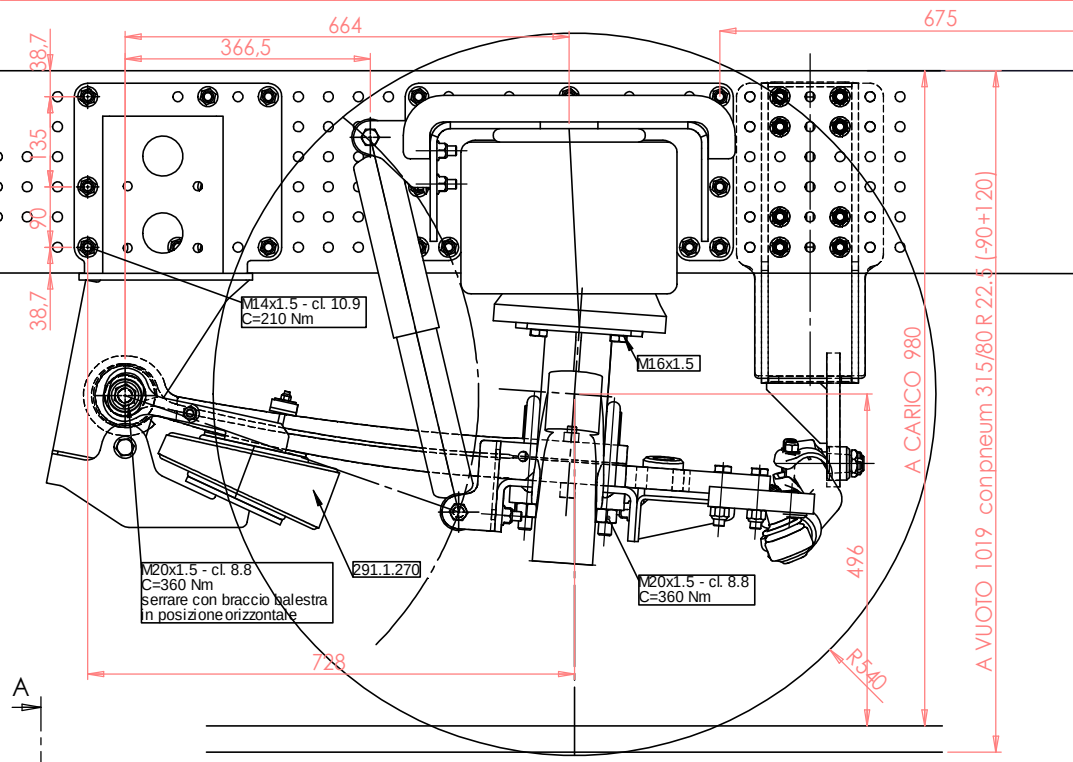

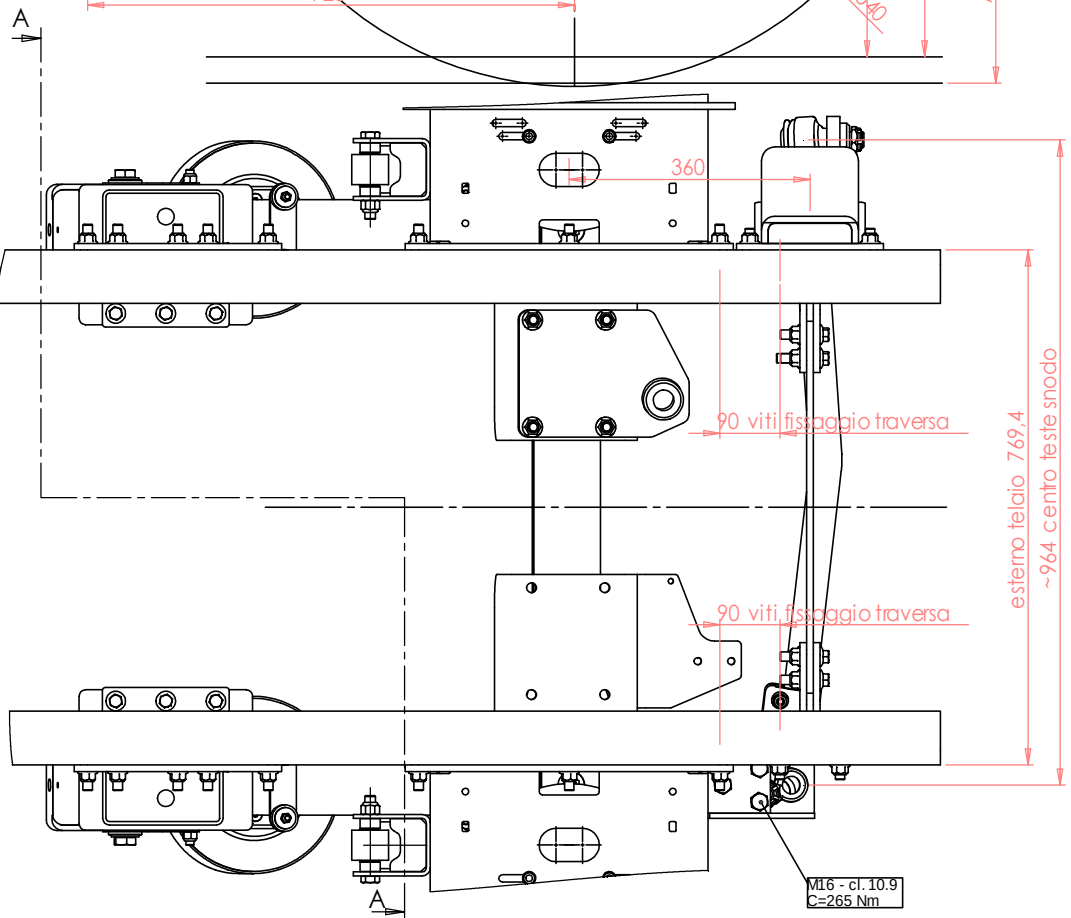

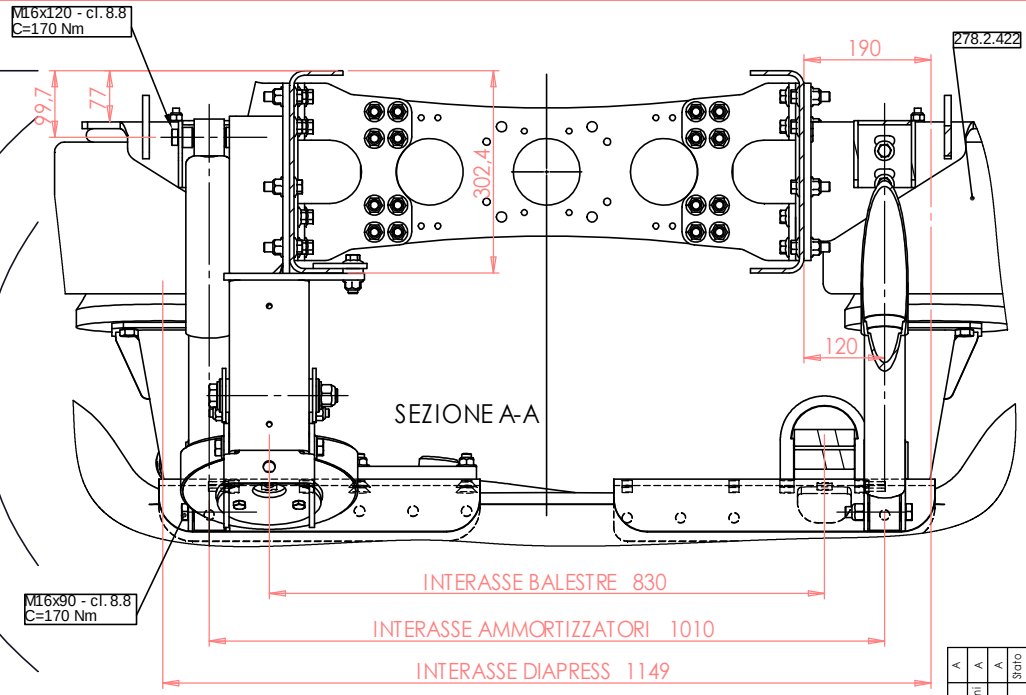

INTERASSE STD 1365 DA ASSE MOTORE

N.B. VERIFICARE SUL VEICOLO EVENTUALI INTERFERENZE CON L'ALBERO DI TRASMISSIONE SE NECESSARIO MODIFICARE L'ALBERO DI TRASMISSIONE.

Rev.	Descrizione	Data	Mod.	App.	Stato
2	Sostituita barra panhard (piegata)	22/12/2015	P.Toppano	P.Toppano	A
1	Sostituita traversa rinforzo barra panhard	12/03/2015	M.Sembenini	M.Sembenini	A
0	Prima approvazione	29/10/2014		P.Toppano	A

Note

Disegnato con : SolidWorks
Modificare solo con:
Drawing with:
Modify only with:

Formato disegno Format Drawing	Materiale Material	Trattamento termico Heat treatment	Finitura superficiale Surface finishing	Massa kg Weight kg
A3 UNI 936		--	--	520,98

Quote senza indicazione di tolleranza secondo tabella UNI EN 22768/1, con grado di precisione MEDIO
Measures without tolerance according to indication according to UNI EN 22768/1, with a degree of precision MEDIUM

Unità di misura / Unit of measure: lineari - linear: mm; angoli gradi sessagesimali / angles sexagesimal degrees

Disegnato da Drawing by	Controllato da Checked by	Data Date	Scala Scale
M.SEMBENINI	P.Martini	02/10/2013	1:8

ISO 9001:2008

S.T. System Truck S.p.A.
via Paesa, 28 I46048 Roverbella (MN)
tel. +39 0376 696809 - fax +39 0376 1760180
www.stsystemtruck.com — info@stsystemtruck.com

Descrizione / Description
SOSPENSIONE INT. PNEUM. ASSE STERZ. IDR. IVECO STRALIS Y/PS 1-3
ASSALE ORIGINALE - VERSIONE BARRA PANHARD -- EU 6

Codice Disegno / Drawing Code	Foglio Sheet
E24*13R11/18*0036*02	1 / 2
10.03.00.0042 10.03.00.0042	

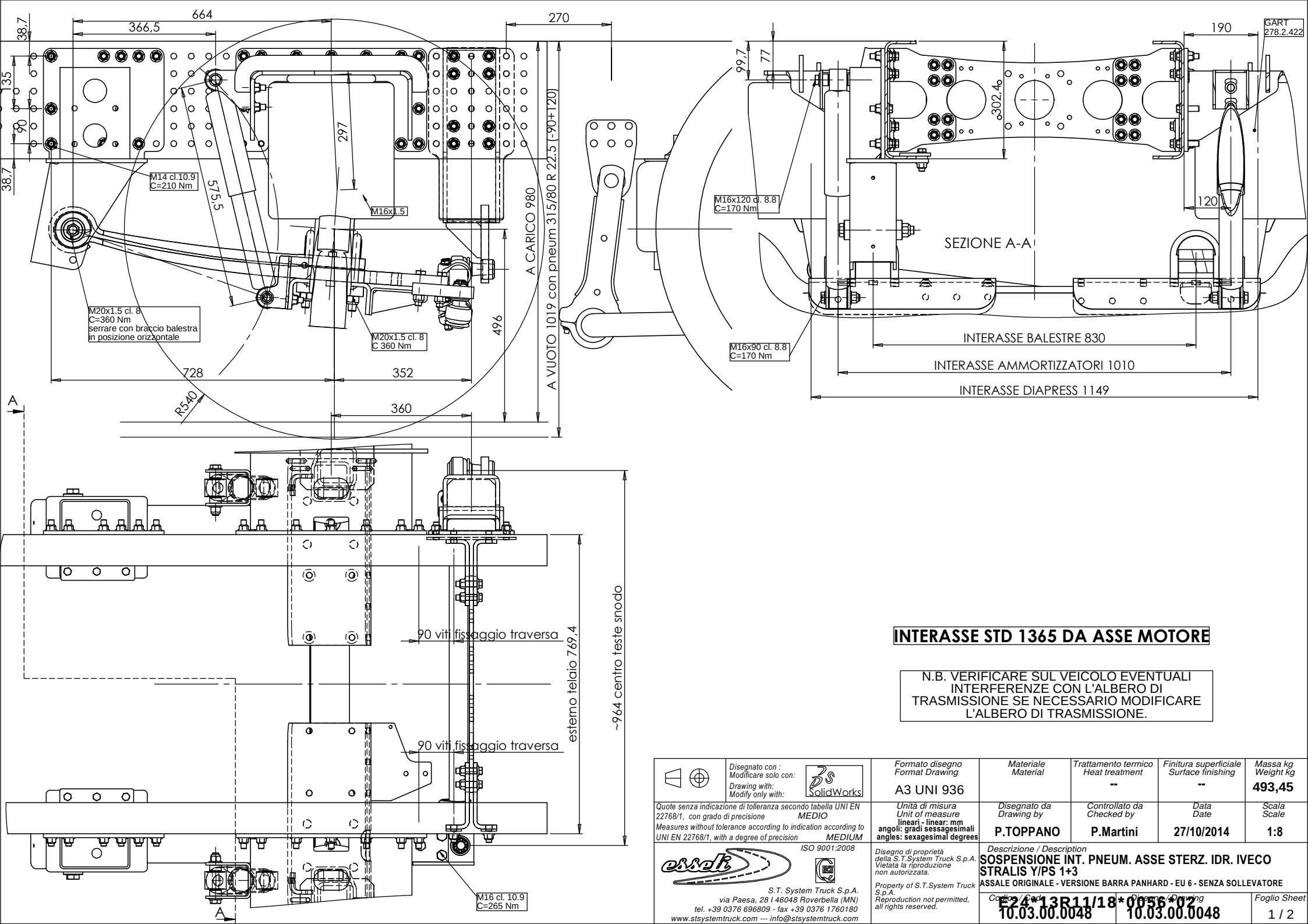

INTERASSE STD 1365 DA ASSE MOTORE

N.B. VERIFICARE SUL VEICOLO EVENTUALI INTERFERENZE CON L'ALBERO DI TRASMISSIONE SE NECESSARIO MODIFICARE L'ALBERO DI TRASMISSIONE.

Disegnato con : / Modificare solo con: / Drawing with: / Modify only with: SolidWorks	Formato disegno / Format Drawing: A3 UNI 936	Materiale / Material:	Trattamento termico / Heat treatment: --	Finitura superficiale / Surface finishing: --	Massa kg / Weight kg: 493,45
Quote senza indicazione di tolleranza secondo tabella UNI EN 22768/1, con grado di precisione MEDIO / Measures without tolerance according to indication according to UNI EN 22768/1, with a degree of precision MEDIUM	Unità di misura / Unit of measure: lineari - linear: mm; angoli: gradi sessagesimali angles: sexagesimal degrees	Disegnato da / Drawing by: P.TOPPANO	Controllato da / Checked by: P.Martini	Data / Date: 27/10/2014	Scala / Scale: 1:8
ISO 9001:2008	Disegno di proprietà della S.T.System Truck S.p.A. Vietata la riproduzione non autorizzata. Property of S.T.System Truck S.p.A. Reproduction not permitted, all rights reserved.	Descrizione / Description: SOSPENSIONE INT. PNEUM. ASSE STERZ. IDR. IVECO STRALIS Y/PS 1+3 — ASSALE ORIGINALE - VERSIONE BARRA PANHARD - EU 6 - SENZA SOLLEVATORE			
S.T. System Truck S.p.A. via Paesa, 28 I 46048 Roverbella (MN) tel. +39 0376 696809 - fax +39 0376 1760180 www.stsystemtruck.com --- info@stsystemtruck.com		Codice / Code: E24*13R11/18*0056*02	Disegno / Drawing: 10.03.00.0048		Foglio / Sheet: 1 / 2

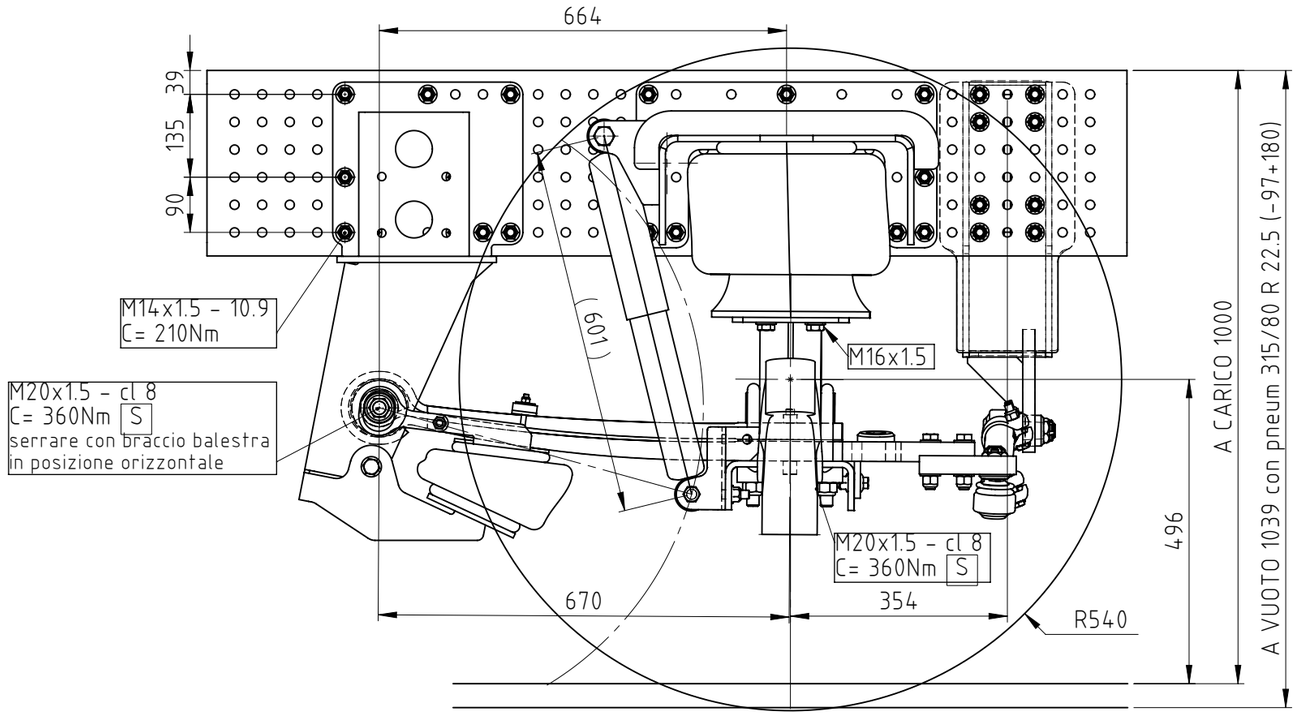

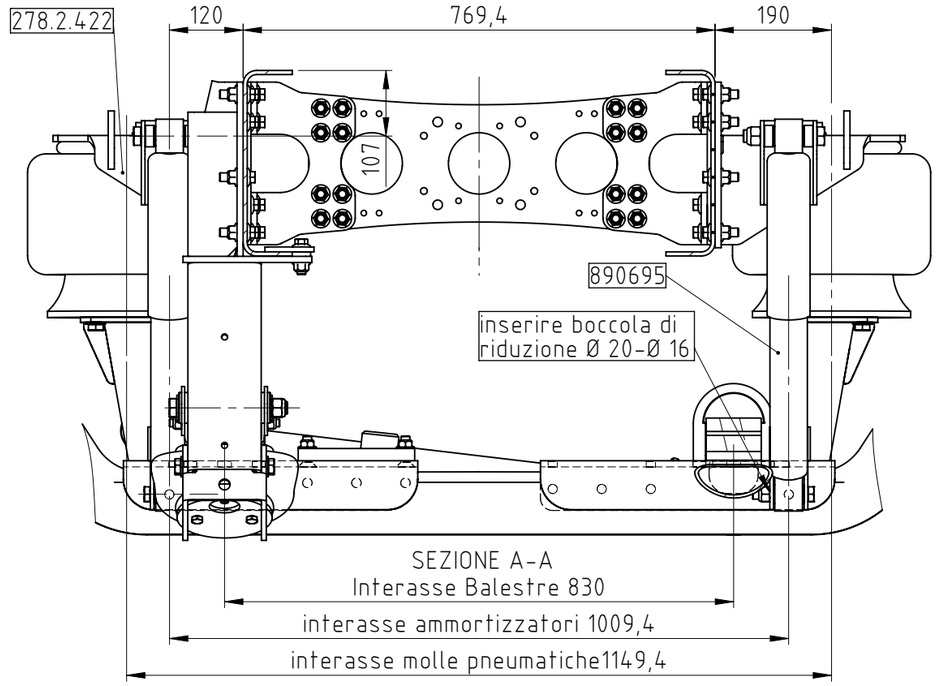

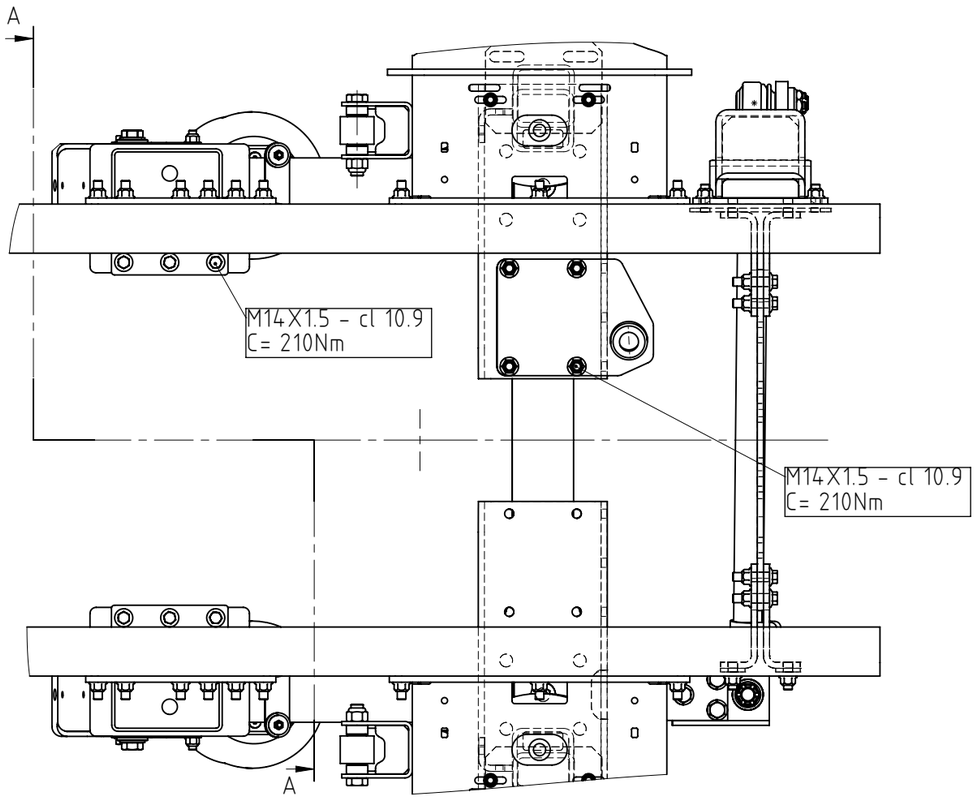

INTERASSE STANDARD 1365 DA ASSE MOTORE

N.B. VERIFICARE SUL VEICOLO EVENTUALI INTERFERENZE
CON L'ALBERO DI TRASMISSIONE
SE NECESSARIO MODIFICARE L'ALBERO DI TRASMISSIONE.

Material	Heat treatment	Surface finishing	Mass (kg)
--	--	--	355,97

Tightening tolerance	ISO 2768 - ----	Author	Date	Scale
- 1004	Tolerancing ISO 8015	F.MARTINI	09/08/2018	1:10

S.T. System Truck S.p.A.
via Paesa, 28 - I 46048 Roverbella (MN)
tel. +39 0376 696809
www.stsystemtruck.com

Description
SOSPENSIONE INT. PNEUM. ASSE STERZ. IDR. IVECO STRALIS
CM 1+3
ASSALE ORIGINALE - VERSIONE BARRA PANHARD

Code	Drawing	Sheet	Format
10.03.00.0058	10.03.00.0058	1/2	A3

E24*13R11/18*0056*02

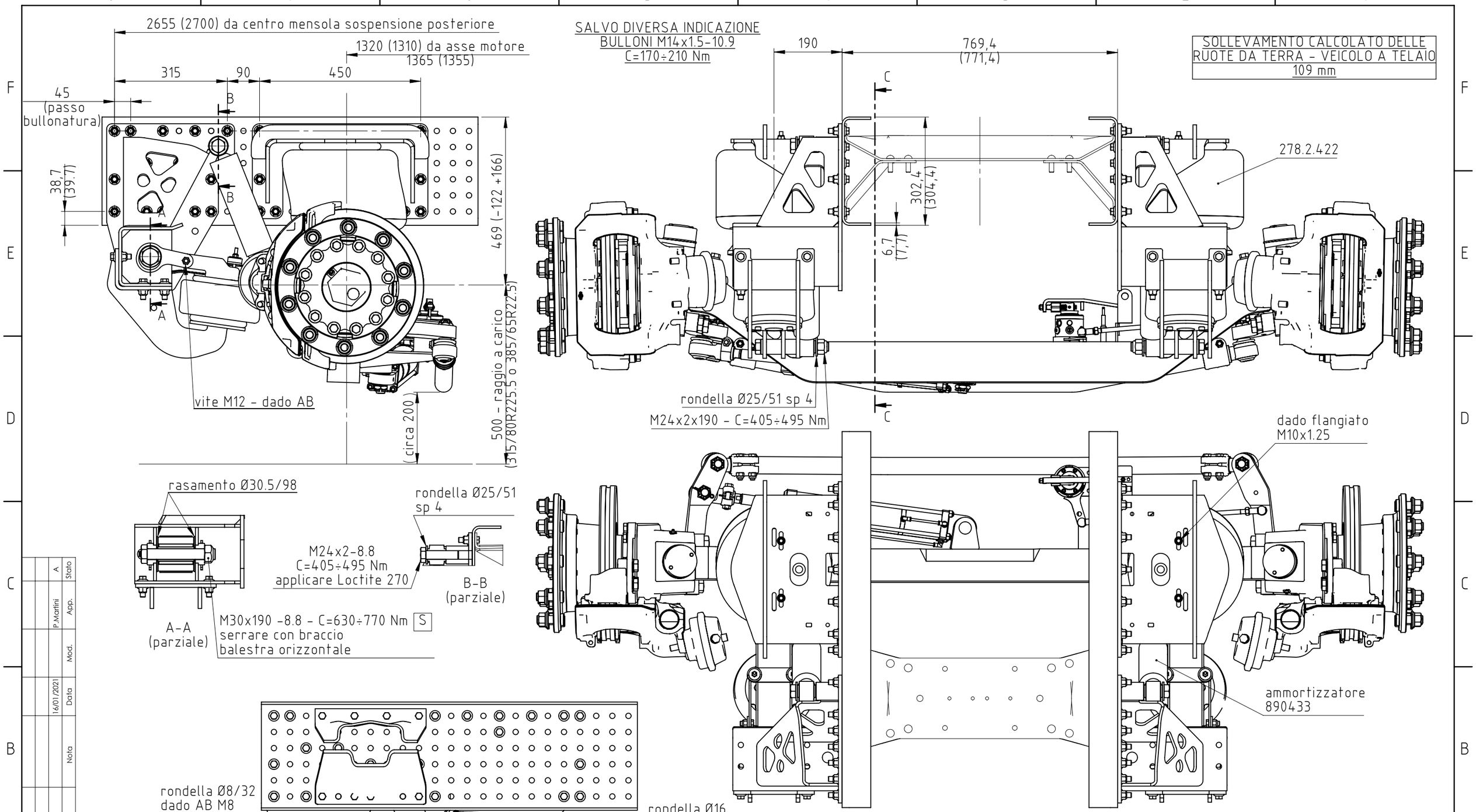

Rev.	Descrizione	Nota	Data	Mod.	App.	Stato
0	Prima approvazione		16/01/2021		P.Martini	A

Material	Heat treatment	Surface finishing	Mass (kg)
	--	--	

Tightening tolerance	ISO 2768 - ----	Author	Date	Scale
- 1004	Tolerancing ISO 8015	F.MARTINI	30/12/2020	1:10

S.T. System Truck S.p.A.
via Paesa, 28 - I 46048 Roverbella (MN)
tel. +39 0376 696809
www.stsystemtruck.com

Description
SOSPENSIONE INT. PNEUM. IVECO 260S 280X ON - ASSALE TECMA STERZ. IDR.
CON SOLLEVATORE

Code	Drawing	Sheet	Format
10.03.00.0063	10.03.00.0063	1/1	A3

E24*13R11/18*0056*02

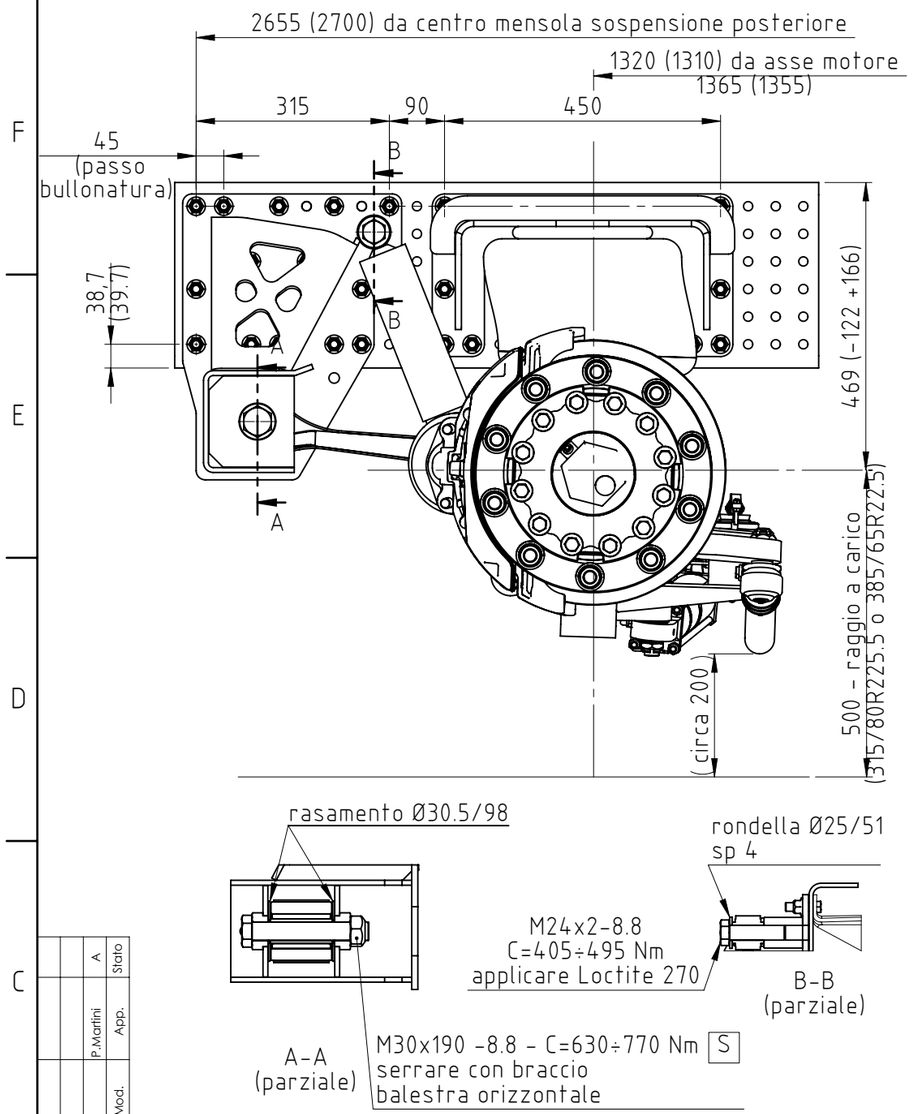

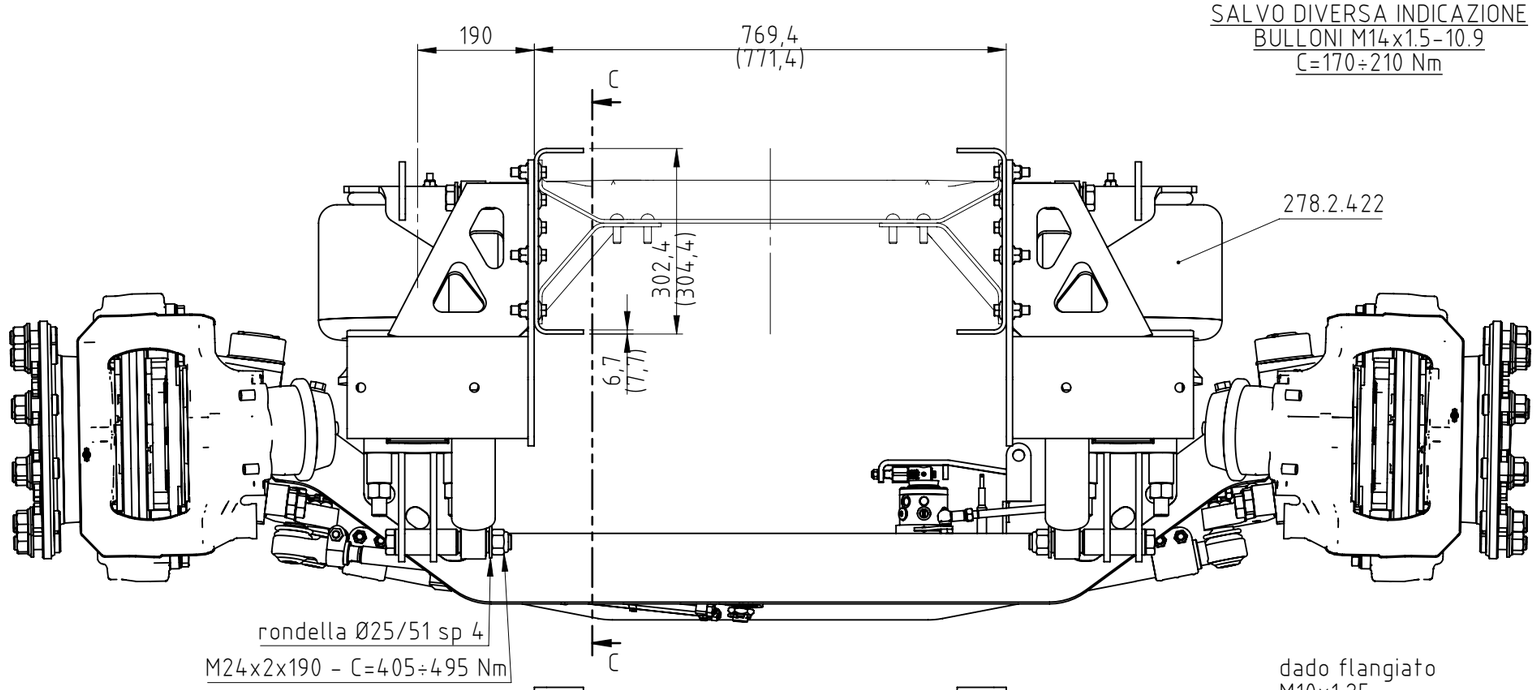

SALVO DIVERSA INDICAZIONE
BULLONI M14x1.5-10.9
C=170÷210 Nm

A-A
(parziale)

M30x190 -8.8 - C=630÷770 Nm S
serrare con braccio
balestra orizzontale

B-B
(parziale)

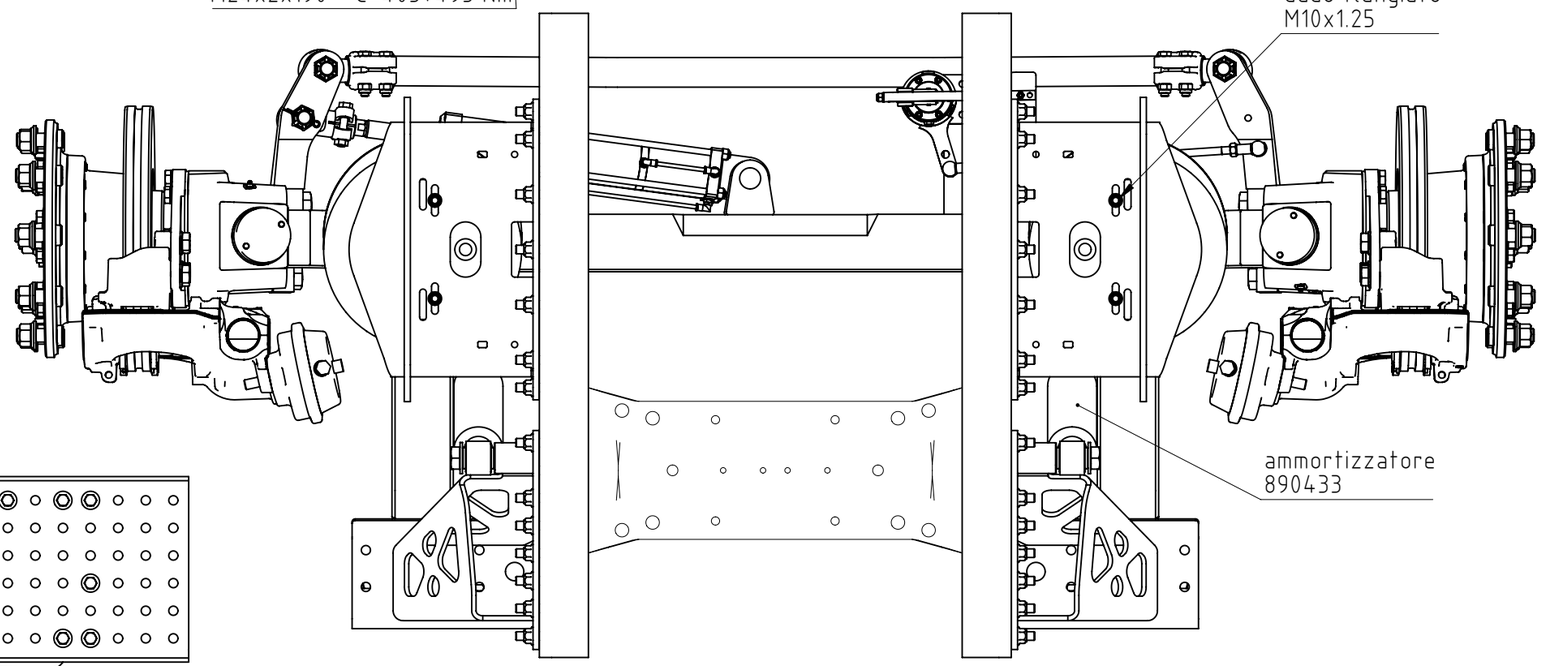

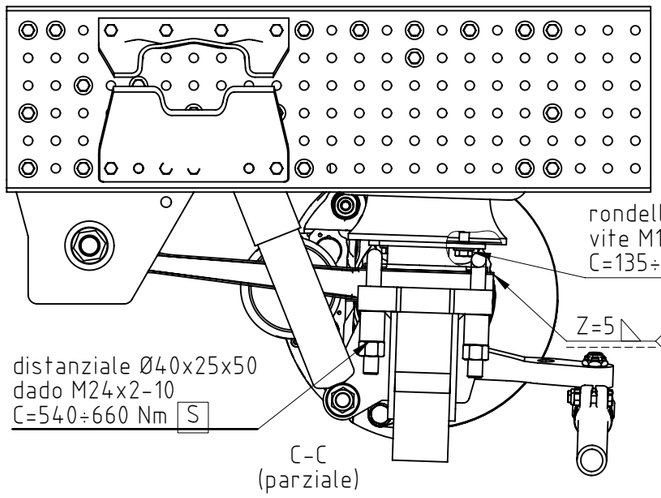

C-C
(parziale)

Rev.	Descrizione	Nota	Data	Mod.	App.	Stato
0	Prima approvazione		16/01/2021		P.Martini	A

Material	Heat treatment	Surface finishing	Mass (kg)
	--	--	

Tightening tolerance	ISO 2768 - ----	Author	Date	Scale
- 1004	Tolerancing ISO 8015	P.MARTINI	15/01/2021	1:10

S.T. System Truck S.p.A.
via Paesa, 28 - I 46048 Roverbella (MN)
tel. +39 0376 696809
www.stsystemtruck.com

Description
SOSPENSIONE INT. PNEUM. IVECO 260S 280X ON - ASSALE
TECMA STERZ. IDR.
SENZA SOLLEVATORE

Code	Drawing	Sheet	Format
10.03.00.0064	10.03.00.0064	1/1	A3

E24*13R11/18*0056*02

* APPLICARE LOCTITE 270

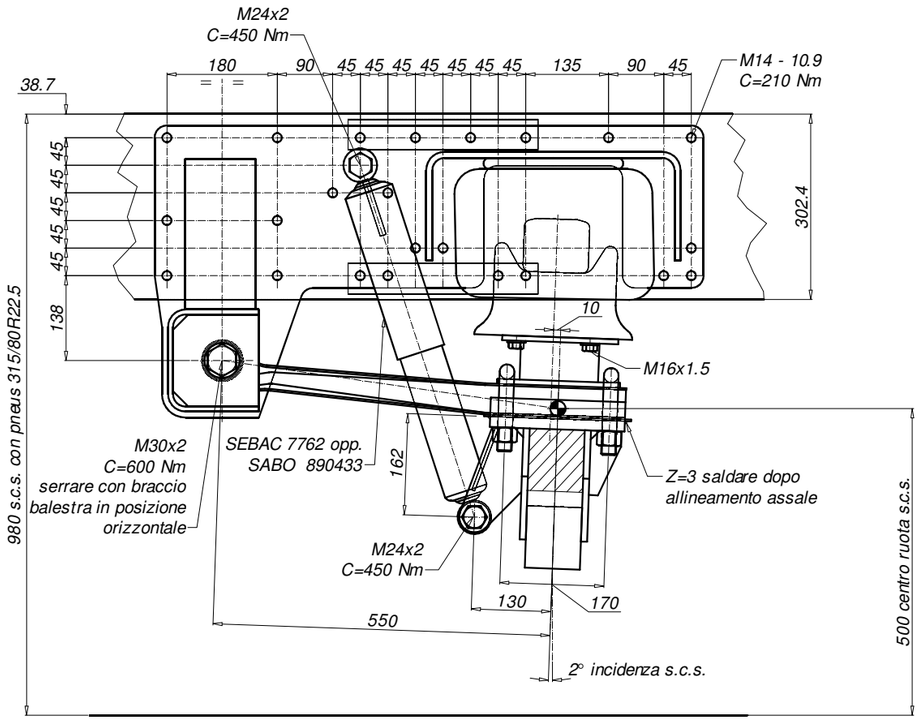

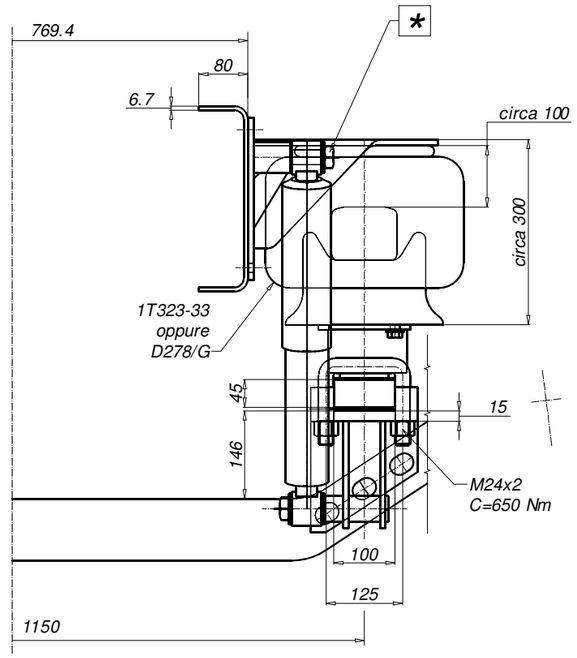

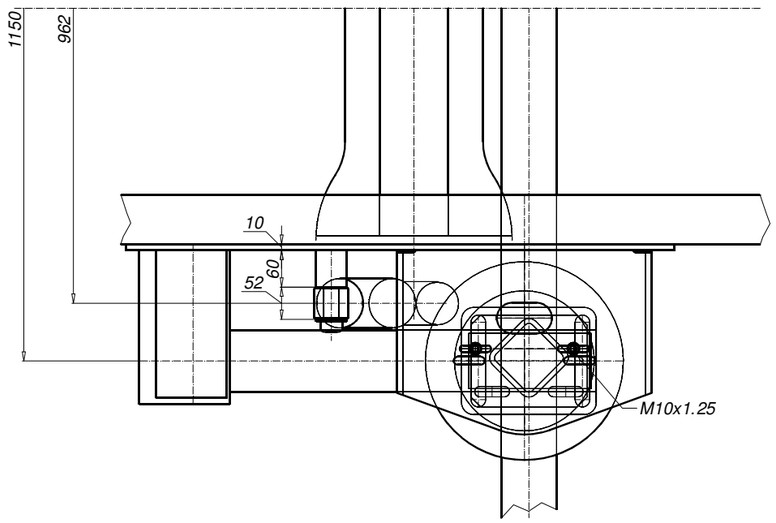

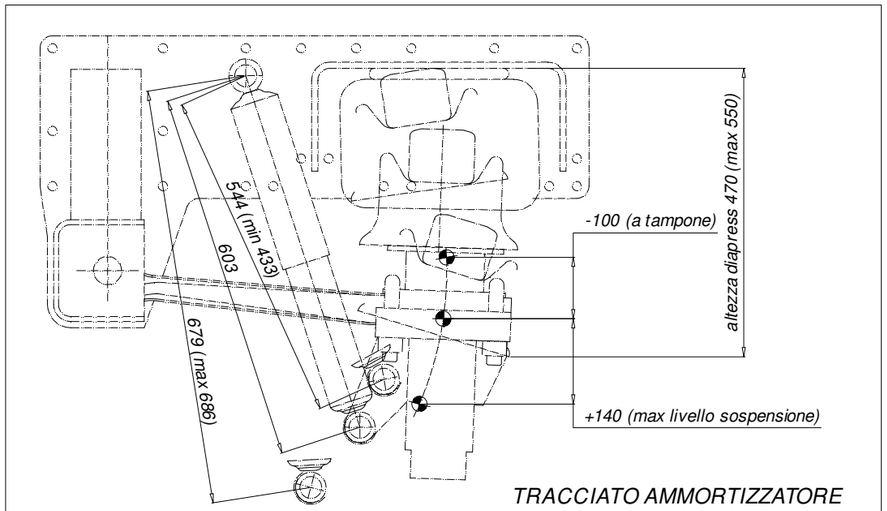

TRACCIATO AMMORTIZZATORE

N.B.: VERIFICARE SUL VEICOLO EVENTUALI INTERFERENZE
CON L'ALBERO DI TRASMISSIONE.
SE NECESSARIO MODIFICARE L'ALBERO DI TRASMISSIONE.

1. Aggiunta nota LOCTITE 270 - 26.04.2018 C.M.

Pos.	Q.tà	Designazione, materiale, dimensione, ecc.				Codice	Modifiche
Materiale	Unificazione	Trattamento	Caratteristiche meccaniche	Massa kg	Codice grezzo	Sostituisce disegno	
.....	.....	.....	.....	.....	.....	.....	
Disegnato da	Controllato da	Data	Scala	Quote senza indicazione di tolleranza secondo tabella UNI EN 22768/1, con grado di precisione		Codice fornitore	
P. Martini	.....	02.11.2000	1 : 10			.....	

S.T. System Truck s.r.l.
viale della Scienza, 13 - I 37064 Povegliano Veronese (VR)
tel. +39 0457970322 - fax +39 0456359658

TITOLO SOSPENSIONE PNEUMATICA PER ASSE CENTRALE STERZANTE IDRAULICO (veicoli IVECO MP MH passo 4500)

N° DISEGNO	Modifica	Foglio
10110001	1 - 26.04.2018	1/1

E24*13R11/18*0056*02

	Denomination		
1	APU (Air Processing Unit) 11 bar		
	Pressure controller	Operating range	0,8bar+0,7bar
		Cut- off pressure	11±0,2bar
	Air suspens.	Operating pressure Port 25	9,3 - 11,2 bar
	Four circuit protection valve	Opening pressure	Port 21,22 7,5+0,3bar
			Port 23,24,26 7,5 +0,1 -0,2 bar
		Static closing pressure	Port 21,22 6,5±0,25 bar
			Port 23,24,26 5,9±0,25bar
		Operating pressure	Port 21,22 9,3 - 11,2 bar
			Port 23,24, 8,5-0,3 bar Port 26 8,5-0,5bar
	APU (Air Processing Unit) 12,5 bar		
	Pressure controller	Operating range	1,0bar+0,6bar
		Cut- off pressure	12,5 ±0,2bar
	Air suspens.	Operating pressure Port 25	10,7 - 12,7 bar
	Four circuit protection valve	Opening pressure	Port 21,22 7,4+0,3bar
			Port 23,24,26 7,4 +0,1 -0,2 bar
		Static closing pressure	Port 21,22 6,5±0,25 bar
			Port 23,24,26 5,9±0,25 bar
		Operating pressure	Port 21,22 10,4-0,4 bar
			Port 23,24, 8,5-0,3 bar Port 26 8,5-0,5bar
2	Air tank 20L		
3	Air tank 30L		
4	EBS - Axle modulator		
5	CBU EBS2 (Central Brake Unit)		
6	Trailer control valve		
7	Hand brake valve		
8	Relay valve		
9	A.B.S. solenoid valve		
10	Check- valve		
11	Solenoid- valve		
12	Test coupling		
13	Drain valve		
14	Coupling heads		
15	Two- way valve		
16	Double cut-off valve		
17	Spring brake cylinder *20/24"*		
18	Brake chamber *12" oppure 14"*		
19			
20	Pressure switch 6.6 ± 0.2 bar		
21	Pressure switch 5.5±0.2 bar		
22	3/2- Directional control valve (Optional)		
23	Spring brake cylinder		
24	Overpressure valve 14 bar (Optional)		
30	Coupling heads ISO + duomatik		
31	Coupling heads duomatik		

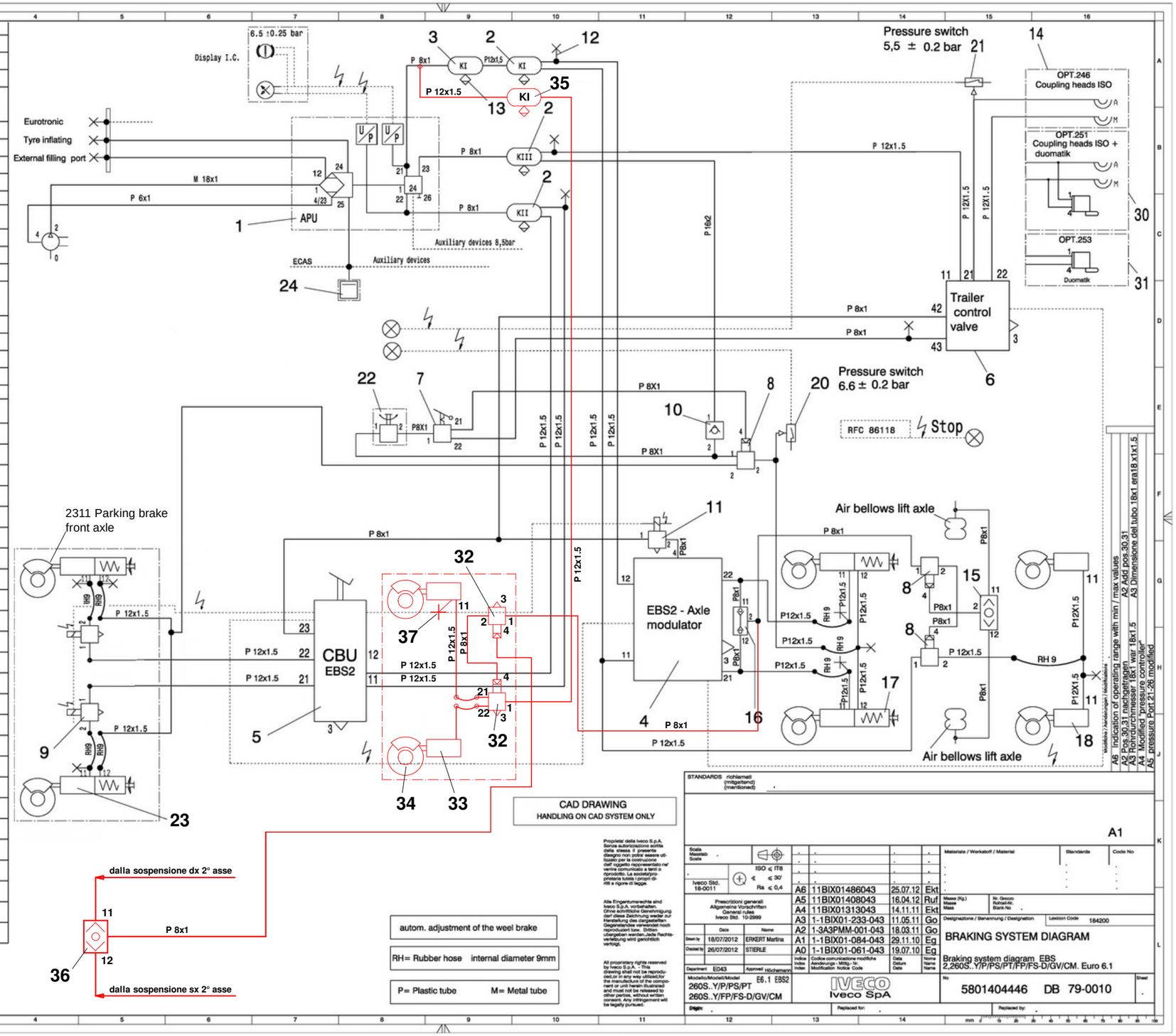

Parti aggiunte per allestimento 8x2 (1+3)	
Pos.	Denominazione
23	Cilindro freno doppio 24/14" oppure 30/14"
32	Valvola relè
33	Cilindro freno 12"
34	Freno a disco SN7
35	Serbatoio aria 20l
36	Selettore massima pressione
37	Presa controllo pressione

Schema impianto frenante - con sezione rimorchio

Rev.	
4	Aggiornato cartiglio, Aggiornato schema e legenda per interruttore MY2019, Aggiunto foglio 4 - 13/07/20 F.M.
3	Sostituita elettrovalvola N.A. con N.C. pos. "q" - 04/12/18 P.M.
2	Aggiunte misure brake chambers assi originali in alternativa - 18/06/18 P.T.
1	Modificato cartiglio - 12/01/15 P.T.

Tightening tolerance - I004	ISO 2768 - ---- Tolerancing ISO 8015	Author P. TOPPANO	Date 20.09.2013	Scale 1:1

S.T. System Truck S.p.A.
via Paesa, 28 - I 46048 Roverbella (MN)
tel. +39 0376 696809
www.stsystemtruck.com

Description: SCHEMA IMPIANTO PNEUMATICO IVECO 260S 280X EBS2 Y/P/PS/FP/FS-D/GV/CM 6x2 IN ALLESTIMENTO 8X2 (1+3) - CON SOLLEVATORE

Code	Drawing	Sheet	Format
25.01.20.0024	25.01.20.0024	1/4	A3

E24*13R11/18*0056*02

	Denomination		
1	APU (Air Processing Unit) 11 bar		
	Pressure controller	Operating range	0,8bar+0,7bar
		Cut- off pressure	11±0,2bar
	Air suspens.	Operating pressure Port 25	9,3 - 11,2 bar
	Four circuit protection valve	Opening pressure	Port 21,22 7,5+0,3bar
			Port 23,24,26 7,5 +0,1 -0,2 bar
		Static closing pressure	Port 21,22 6,5±0,25 bar
			Port 23,24,26 5,9±0,25bar
		Operating pressure	Port 21,22 9,3 - 11,2 bar
			Port 23,24, 8,5-0,3 bar Port 26 8,5-0,5bar
	APU (Air Processing Unit) 12,5 bar		
	Pressure controller	Operating range	1,0bar+0,6bar
		Cut- off pressure	12,5 ±0,2bar
	Air suspens.	Operating pressure Port 25	10,7 - 12,7 bar
	Four circuit protection valve	Opening pressure	Port 21,22 7,4+0,3bar
			Port 23,24,26 7,4 +0,1 -0,2 bar
		Static closing pressure	Port 21,22 6,5±0,25 bar
			Port 23,24,26 5,9±0,25 bar
		Operating pressure	Port 21,22 10,4-0,4 bar
			Port 23,24, 8,5-0,3 bar Port 26 8,5-0,5bar
2	Air tank 20L		
3	Air tank 30L		
4	EBS - Axle modulator		
5	CBU EBS2 (Central Brake Unit)		
6			
7	Hand brake valve		
8	Relay valve		
9	A.B.S. solenoid valve		
10	Check- valve		
11	Solenoid- valve		
12	Test coupling		
13	Drain valve		
14			
15	Two- way valve		
16	Double cut-off valve		
17	Spring brake cylinder *20/24"*		
18	Brake chamber *12" oppure 14"*		
19			
20	Pressure switch 6.6 ± 0.2 bar		
21			
22	3/2- Directional control valve (Optional)		
23	Spring brake cylinder		
24	Overpressure valve 14 bar (Optional)		

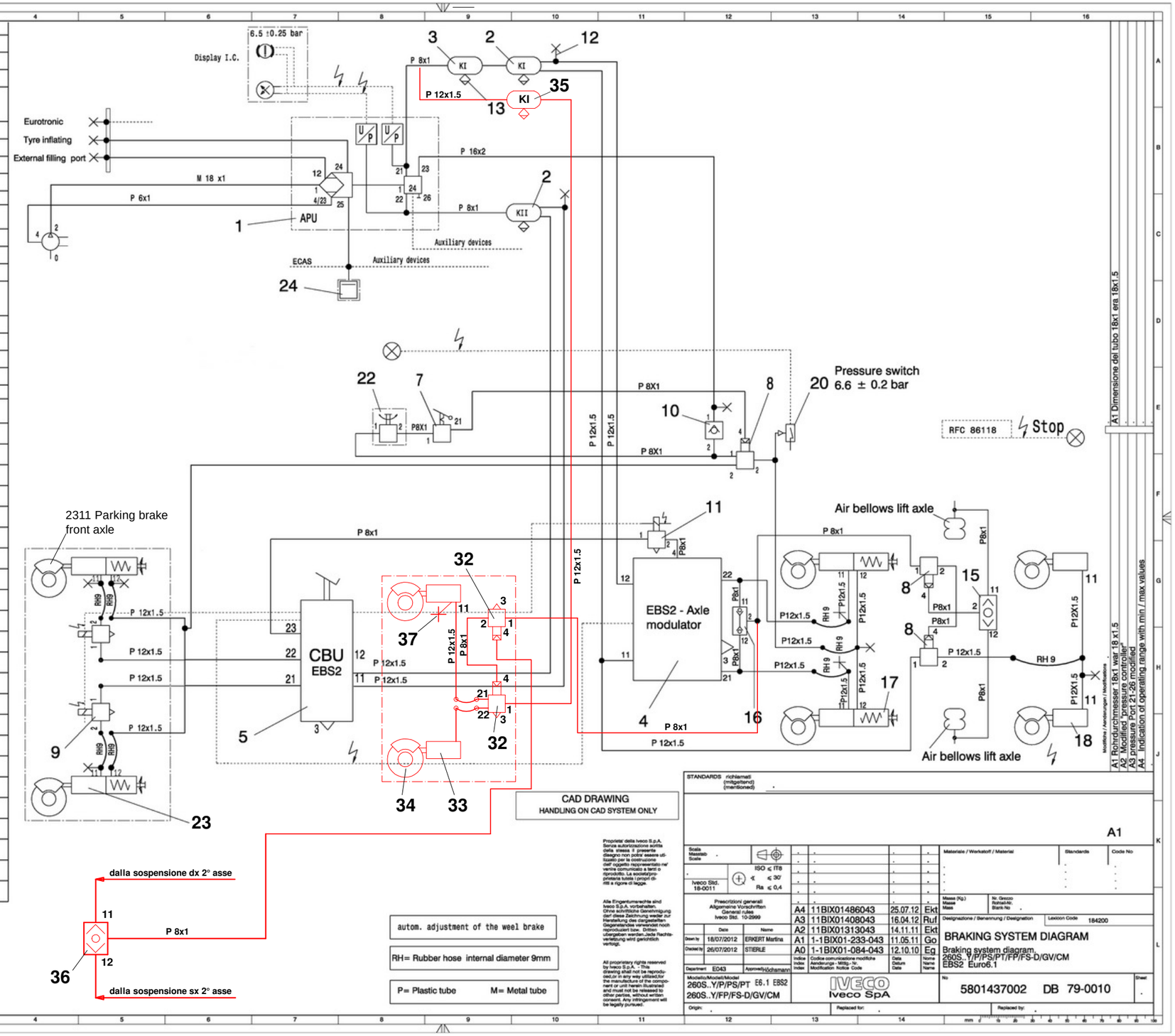

Parti aggiunte per allestimento 8x2 (1+3)	
Pos.	Denominazione
23	Cilindro freno doppio 24/14" oppure 30/14"
32	Valvola relè
33	Cilindro freno 12"
34	Freno a disco SN7
35	Serbatoio aria 20l
36	Selettore massima pressione
37	Presa controllo pressione

Schema impianto frenante - senza sezione rimorchio

Rev.	
4 -	Aggiornato cartiglio, Aggiornato schema e legenda per interruttore MY2019, Aggiunto foglio 4 - 13/07/20 F.M.
3 -	Sostituita elettrovalvola N.A. con N.C. pos. "q" - 04/12/18 P.M.
2 -	Aggiunte misure brake chambers assi originali in alternativa - 18/06/18 P.T.
1 -	Modificato cartiglio - 12/01/15 P.T.

Tightening tolerance - I004	ISO 2768 - ---- Tolerancing ISO 8015	Author P. TOPPANO	Date 20.09.2013	Scale 1:1

S.T. System Truck S.p.A.
via Paesa, 28 - I 46048 Roverbella (MN)
tel. +39 0376 696809
www.stsystemfruck.com

Description: SCHEMA IMPIANTO PNEUMATICO IVECO 260S 280X EBS2 Y/P/PS/FP/FS-D/GV/CM 6x2 IN ALLESTIMENTO 8X2 (1+3) - CON SOLLEVATORE

Code	Drawing	Sheet	Format
25.01.20.0024	25.01.20.0024	2/4	A3

E24*13R11/18*0056*02

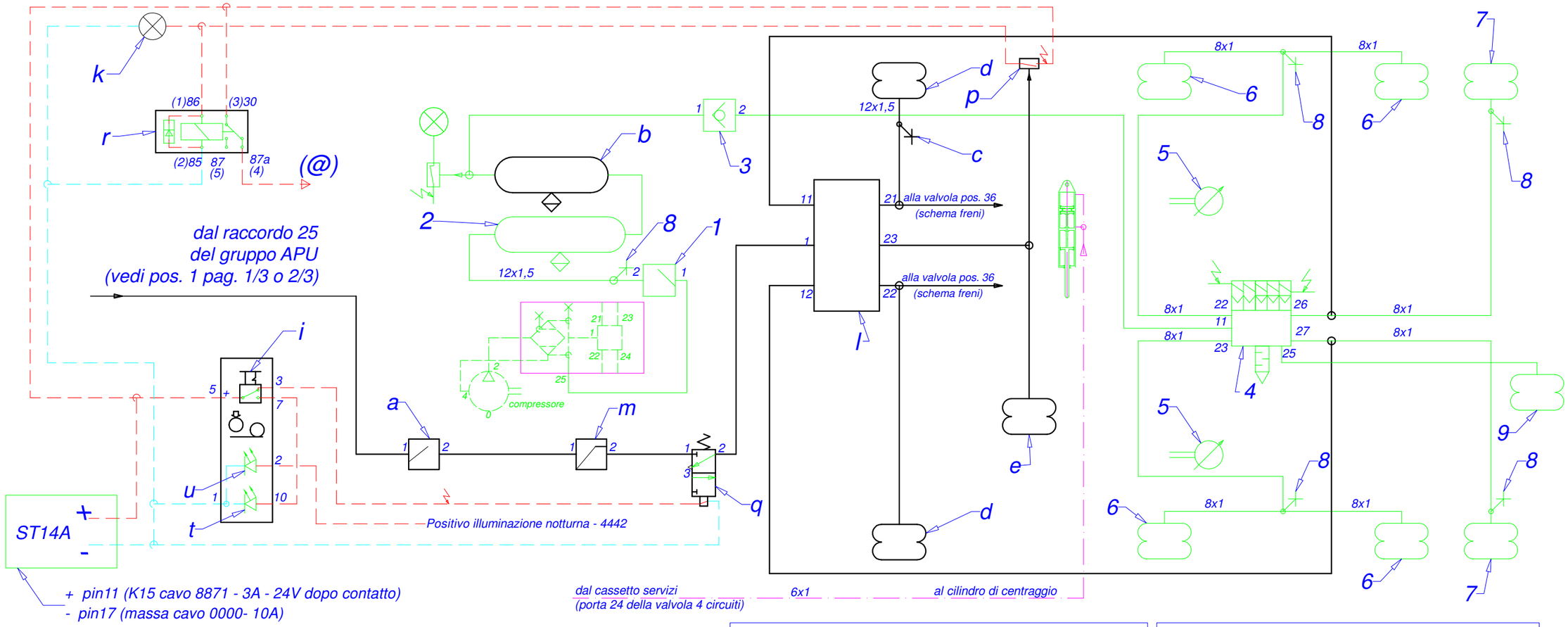

+ pin11 (K15 cavo 8871 - 3A - 24V dopo contatto)
- pin17 (massa cavo 0000- 10A)

LEGENDA
1 - Valvola presa aria con ritorno limitato
2 - Serbatoio aria 30 l (approvato CE) con valvola manuale di spurgo condensa
3 - Valvola di ritenuta
4 - Distributore elettropneumatico
5 - Sensore di posizione (livellatore)
6 - Molla ad aria sospensione asse motore
7 - Molla ad aria sospensione asse posteriore
8 - Presa per controllo pressione
9 - Molla ad aria sollevatore asse posteriore

Parti aggiunte per allestimento 8x2 1+3
a - Valvola di presa aria con ritorno limitato (8.5 bar)
b - Serbatoio aria 30 l - approvato CE
c - Presa controllo pressione
d - Molla ad aria sospensione 2° asse
e - Molla ad aria sollevatore 2° asse
i - Interruttore N.C. per disattivazione del sollevatore automatico 2° asse (°)
k - Luce spia (su cruscotto) dell'inserimento del sollevatore
l - Valvola deviatrice a due sezioni - sollevamento automatico dell'asse - OFF con p=4.3 bar - ON con p<=2.6 bar (°)
m - Valvola limitatrice - 7.5 bar
p - Pressostato N.A. - per segnalazione dell'inserimento del sollevatore (5,0 bar) (°)
q - Elettrovalvola N.C.
r - Relé elettrico di alimentazione dell'impianto di sterzo
t - Luce spia di segnalazione disattivazione sollevatore automatico 2° asse
u - Ideogramma interruttore sollevatore

(°)Valori ponderali nella condizione di incipiente discesa del 2° asse.
- Ponte motore 11500 kg
- 4° asse 5000 kg (p=4.3 bar)

(@) Alimentazione dell'impianto elettrico di sterzo - vedi schema n. 35100001.
Sollevando l'assale lo sterzo è "OFF".

L'impianto è dotato di trasspositore di carico sul 4° asse (originale) e sul 2° asse (comandato direttamente dal 4° asse).

(°) La valvola deviatrice "l" controlla automaticamente la funzione di sollevamento del 2° asse. Con pressione bassa (< 4.3 bar) nella sospensione del 4°asse, il 2° asse viene sollevato. Se la pressione nella sospensione del 4° asse aumenta a 4.3 bar o più, la valvola "l" si commuta automaticamente, il sollevatore viene disattivato e la sospensione del 2° asse rialimentata. Il sollevamento del 2° asse viene automaticamente riattivato se la pressione nelle sospensioni scende sotto 2.6 bar. L'esclusione volontaria del dispositivo sollevatore automatico è realizzata tramite l'interruttore "i" e l'elettrovalvola "q".

USURA FRENI DEL 2° ASSE

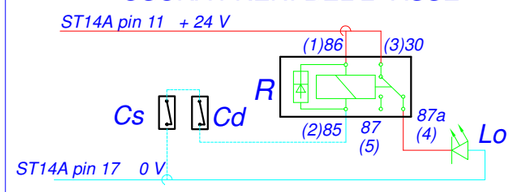

LEGENDA
R - Relé con diodo - N.C., Lo acceso, con pattini usurati -
Cs - Contatto su pinza freno sinistra (contatto aperto con pattini usurati)
Cd - Contatto su pinza freno destra (contatto aperto con pattini usurati)
Lo - Led rosso di segnalazione usura freni

impianto pneumatico originale del veicolo
impianto aggiunto: tubazione pneumatica Ø8x1
impianto aggiunto: cavo elettrico + 24V
impianto aggiunto: cavo elettrico - massa

Schema sospensioni e servizi - connessione al 4° asse posteriore

Rev.	
4	Aggiornato cartiglio, Aggiornato schema e legenda per interruttore MY2019, Aggiunto foglio 4 - 13/07/20 F.M.
3	Sostituita elettrovalvola N.A. con N.C. pos. "q" - 04/12/18 P.M.
2	Aggiunte misure brake chambers assi originali in alternativa - 18/06/18 P.T.
1	Modificato cartiglio - 12/01/15 P.T.

Tightening tolerance - 1004	ISO 2768 - ---- Tolerancing ISO 8015	Author P. TOPPANO	Date 20.09.2013	Scale 1:1

S.T. System Truck S.p.A.
via Paesa, 28 - I 46048 Roverbella (MN)
tel. +39 0376 696809
www.stsystemtruck.com

Description
SCHEMA IMPIANTO PNEUMATICO IVECO 260S 280X EBS2
Y/P/PS/FP/FS-D/GV/CM 6x2 IN ALLESTIMENTO 8X2 (1+3)
- CON SOLLEVATORE

Code	Drawing	Sheet	Format
25.01.20.0024	25.01.20.0024	3/4	A3

E24*13R11/18*0056*02

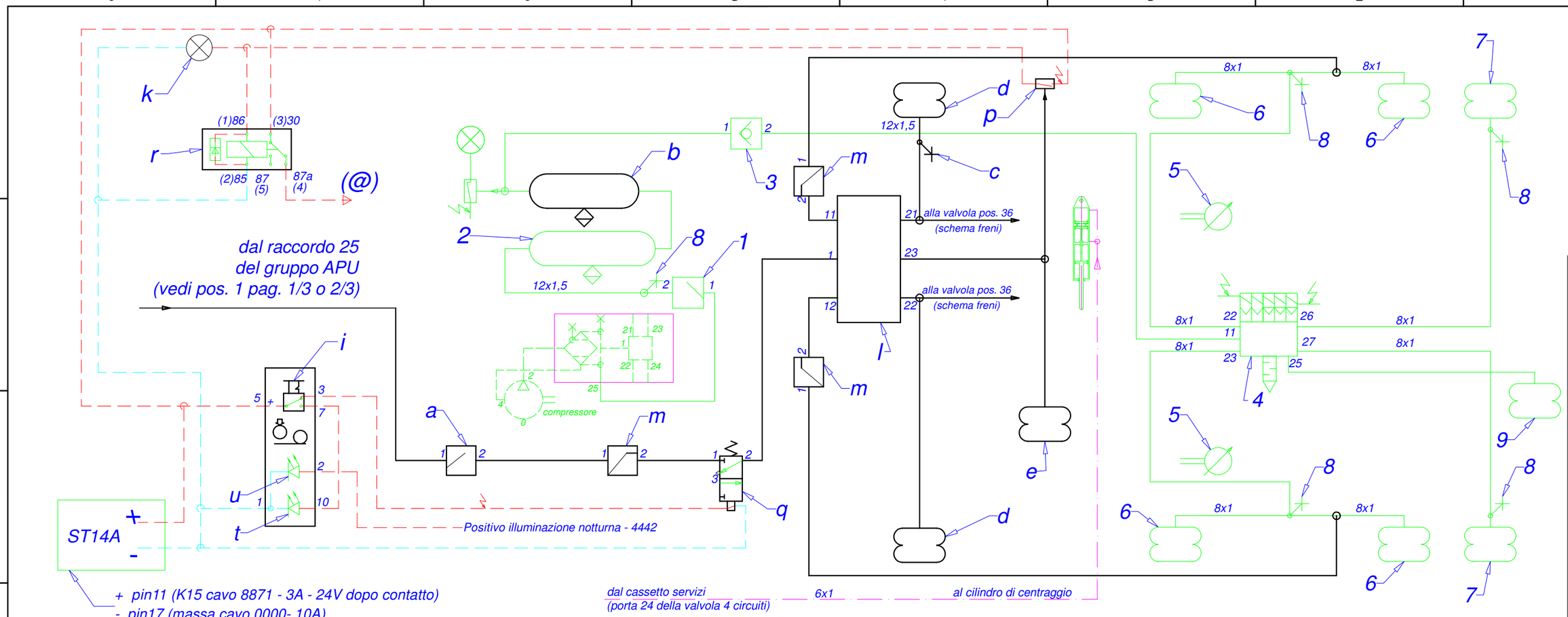

LEGENDA

1 - Valvola presa aria con ritorno limitato
2 - Serbatoio aria 30 l (approvato CE) con valvola manuale di spurgo condensa
3 - Valvola di ritenuta
4 - Distributore elettropneumatico
5 - Sensore di posizione (livellatore)
6 - Molla ad aria sospensione asse motore
7 - Molla ad aria sospensione asse posteriore
8 - Presa per controllo pressione
9 - Molla ad aria sollevatore asse posteriore

Parti aggiunte per allestimento 8x2 1+3
a - Valvola di presa aria con ritorno limitato (8.5 bar)
b - Serbatoio aria 30 l - approvato CE
c - Presa controllo pressione
d - Molla ad aria sospensione 2° asse
e - Molla ad aria sollevatore 2° asse
i - Interruttore N.C. per disattivazione del sollevatore automatico 2° asse
k - Luce spia (su cruscotto) dell'inserimento del sollevatore
l - Valvola deviatrice a due sezioni - sollevamento automatico dell'asse - OFF con p=4.3 bar - ON con p<=2.6 bar
m - Valvola limitatrice - 7.5 bar
p - Pressostato N.A. - per segnalazione dell'inserimento del sollevatore (5,0 bar)
q - Elettrovalvola N.C.
r - Relé elettrico di alimentazione dell'impianto di sterzo
t - Luce spia di segnalazione disattivazione sollevatore automatico 2° asse
u - Ideogramma interruttore sollevatore

(°) La valvola deviatrice "l" controlla automaticamente la funzione di sollevamento del 2° asse. Con pressione bassa (< 4.3 bar) nella sospensione del ponte motore, il 2° asse viene sollevato. Se la pressione nella sospensione del ponte motore aumenta a 4.3 bar o più, la valvola "l" si commuta automaticamente, il sollevatore viene disattivato e la sospensione del 2° asse rialimentata. Il sollevamento del 2° asse viene automaticamente riattivato se la pressione nelle sospensioni scende sotto 2.6 bar. L'esclusione volontaria del dispositivo sollevatore automatico è realizzata tramite l'interruttore "i" e l'elettrovalvola "q".

(@) Alimentazione dell'impianto elettrico di sterzo - vedi schema n. 35100001.
Sollevando l'assale lo sterzo è "OFF".

USURA FRENI DEL 2° ASSE

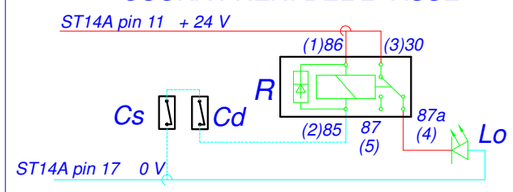

LEGENDA
R - Relé con diodo - N.C., Lo acceso, con pattini usurati -
Cs - Contatto su pinza freno sinistra (contatto aperto con pattini usurati)
Cd - Contatto su pinza freno destra (contatto aperto con pattini usurati)
Lo - Led rosso di segnalazione usura freni

impianto pneumatico originale del veicolo
impianto aggiunto: tubazione pneumatica Ø8x1
impianto aggiunto: cavo elettrico + 24V
impianto aggiunto: cavo elettrico - massa

Schema sospensioni e servizi - connessione al ponte motore

Rev.	
4	Aggiornato cartiglio, Aggiornato schema e legenda per interruttore MY2019, Aggiunto foglio 4 - 13/07/20 F.M.
3	Sostituita elettrovalvola N.A. con N.C. pos. "q" - 04/12/18 P.M.
2	Aggiunte misure brake chambers assi originali in alternativa - 18/06/18 P.T.
1	Modificato cartiglio - 12/01/15 P.T.

Tightening tolerance	ISO 2768 - ----	Author	Date		Scale
- 1004	Tolerancing ISO 8015	P. TOPPANO	20.09.2013		1:1

S.T. System Truck S.p.A.
via Paesa, 28 - I 46048 Roverbella (MN)
tel. +39 0376 696809
www.stsystemtruck.com

Description
SCHEMA IMPIANTO PNEUMATICO IVECO 260S 280X EBS2
Y/P/PS/FP/FS-D/GV/CM 6x2 IN ALLESTIMENTO 8X2 (1+3)
- CON SOLLEVATORE

Code	Drawing	Sheet	Format
25.01.20.0024	25.01.20.0024	4/4	A3

E24*13R11/18*0056*02

Denomination			
1	APU (Air Processing Unit) 11 bar		
	Pressure controller	Operating range	0,8bar+0,7bar
		Cut- off pressure	11±0,2bar
	Air suspens.	Operating pressure Port 25	9,3 - 11,2 bar
	Four circuit protection valve	Opening pressure	Port 21,22 7,5+0,3bar
			Port 23,24,26 7,5 +0,1 -0,3 bar
		Static closing pressure	Port 21,22 6,5±0,25 bar
			Port 23,24,26 5,9±0,25bar
		Operating pressure	Port 21,22 9,3 - 11,2 bar
			Port 23,24, Port 26 8,5-0,3 bar 8,5-0,5bar
	APU (Air Processing Unit) 12,5 bar		
	Pressure controller	Operating range	1,0bar+0,6bar
		Cut- off pressure	12,5 ±0,2bar
	Air suspens.	Operating pressure Port 25	10,7 - 12,7 bar
	Four circuit protection valve	Opening pressure	Port 21,22 7,4+0,3bar
			Port 23,24,26 7,4 +0,1 -0,3 bar
		Static closing pressure	Port 21,22 6,5±0,25 bar
			Port 23,24,26 5,9±0,25 bar
		Operating pressure	Port 21,22 10,4-0,4 bar
			Port 23,24, Port 26 8,5-0,3 bar 8,5-0,5bar
2	Air tank 20L		
3	Air tank 30L		
4	EBS - Axle modulator		
5	CBU EBS2 (Central Brake Unit)		
6	Trailer control valve		
7	Hand brake valve		
8	Relay valve		
9	A.B.S. solenoid valve		
10	Check- valve		
11	Solenoid- valve		
12	Test coupling		
13	Drain valve		
14	Coupling heads		
15	Two- way valve		
16	Double cut-off valve		
17	Spring brake cylinder *20/24"*		
18	Brake chamber *12" oppure 14"*		
19			
20	Pressure switch 6.6 ± 0.2 bar		
21	Pressure switch 5.5±0.2 bar		
22	3/2- Directional control valve (Optional)		
23	Spring brake cylinder		
24	Overpressure valve 14 bar (Optional)		
30	Coupling heads ISO + duomatik		
31	Coupling heads duomatik		

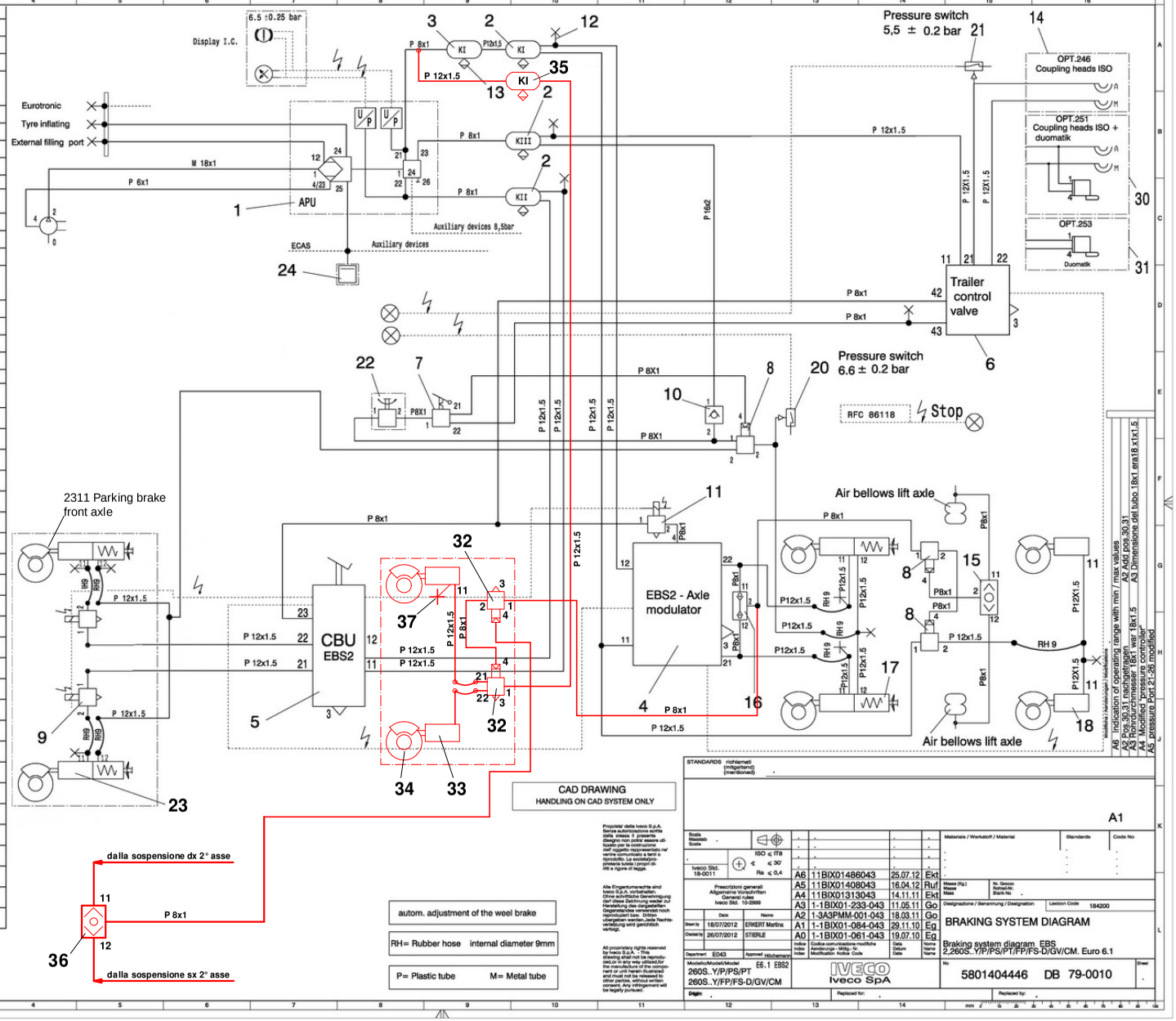

Parti aggiunte per allestimento 8x2 (1+3)	
Pos.	Denominazione
23	Cilindro freno doppio 24/14" oppure 30/14"
32	Valvola relè
33	Cilindro freno 12"
34	Freno a disco SN7
35	Serbatoio aria 20l
36	Selettore massima pressione
37	Presa controllo pressione

Schema impianto frenante - con sezione rimorchio

Rev.	
4	Aggiornato cartiglio, Aggiunto foglio 4 - 13/07/20 F.M.
3	Aggiunte misure breke chambers assali originali in alternativa 18/06/18 P.M.
2	Modifica impianto frenante (alimentazione relè n°32) - 20/02/15 P.T.
1	Modificato cartiglio - 12/01/15 P.T.

E24*13R11/18*0056*02

Tightening tolerance - 1004

ISO 2768 - ---- Tolerancing ISO 8015

Author: P. TOPPANO

Date: 04/09/2014

Scale: 1:1

S.T. System Truck S.p.A.
via Paesa, 28 - I 46048 Roverbella (MN)
tel. +39 0376 696809
www.stsystemtruck.com

Description: SCHEMA IMPIANTO PNEUMATICO IVECO 260S 280X EBS2 Y/P/PS/FP/FS-D/GV/CM 6x2 IN ALLESTIMENTO 8X2 (1+3) - SENZA SOLLEVATORE

Code	Drawing	Sheet	Format
25.01.20.0031	25.01.20.0031	1/4	A3

1	APU (Air Processing Unit) 11 bar		
	Pressure controller	Operating range	0,8bar+0,7bar
		Cut- off pressure	11±0,2bar
	Air suspens.	Operating pressure Port 25	9,3 - 11,2 bar
	Four circuit protection valve	Opening pressure	Port 21,22 7,5+0,3bar
			Port 23,24,26 7,5 +0,1 -0,3 bar
		Static closing pressure	Port 21,22 6,5±0,25 bar
			Port 23,24,26 5,9±0,25bar
		Operating pressure	Port 21,22 9,3 - 11,2 bar
			Port 23,24, Port 26 8,5-0,3 bar 8,5-0,5bar
	APU (Air Processing Unit) 12,5 bar		
	Pressure controller	Operating range	1,0bar+0,6bar
		Cut- off pressure	12,5 ±0,2bar
	Air suspens.	Operating pressure Port 25	10,7 - 12,7 bar
	Four circuit protection valve	Opening pressure	Port 21,22 7,4+0,3bar
			Port 23,24,26 7,4 +0,1 -0,2 bar
		Static closing pressure	Port 21,22 6,5±0,25 bar
			Port 23,24,26 5,9±0,25 bar
		Operating pressure	Port 21,22 10,4-0,4 bar
			Port 23,24, Port 26 8,5-0,3 bar 8,5-0,5bar

2	Air tank 20L
3	Air tank 30L
4	EBS - Axle modulator
5	CBU EBS2 (Central Brake Unit)
6	
7	Hand brake valve
8	Relay valve
9	A.B.S. solenoid valve
10	Check- valve
11	Solenoid- valve
12	Test coupling
13	Drain valve
14	
15	Two- way valve
16	Double cut-off valve
17	Spring brake cylinder *20/24"*
18	Brake chamber *12" oppure 14"*
19	
20	Pressure switch 6.6 ± 0.2 bar
21	
22	3/2- Directional control valve (Optional)
23	Spring brake cylinder
24	Overpressure valve 14 bar (Optional)

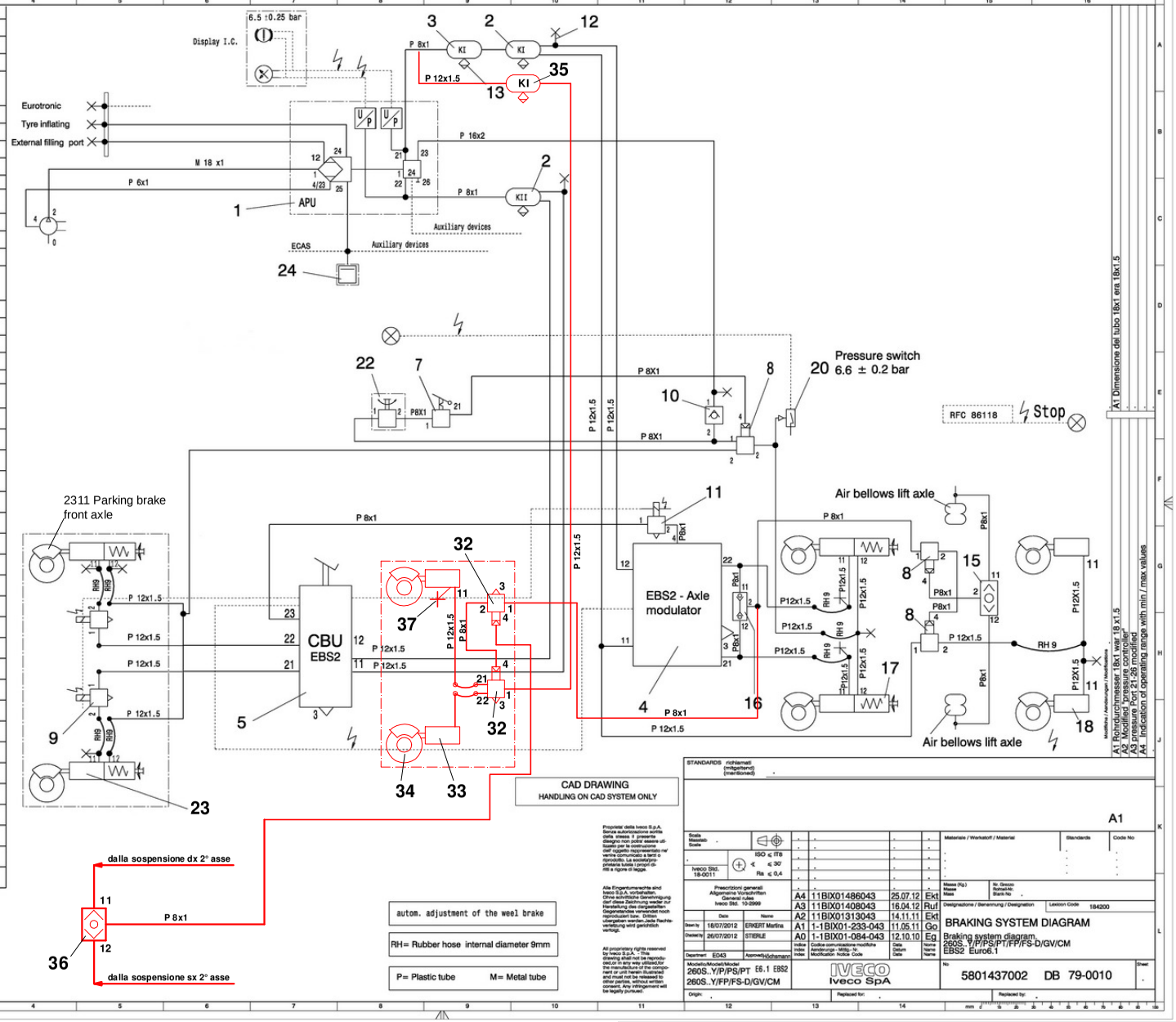

dalla sospensione dx 2° asse

dalla sospensione sx 2° asse

autom. adjustment of the weel brake

RH= Rubber hose internal diameter 9mm

P= Plastic tube M= Metal tube

Rev.	
4	Aggiornato cartiglio, Aggiunto foglio 4 - 13/07/20 F.M.
3	Aggiunte misure breke chambers assali originali in alternativa 18/06/18 P.M.
2	Modifica impianto frenante (alimentazione relè n°32) - 20/02/15 P.T.
1	Modificato cartiglio - 12/01/15 P.T.

Parti aggiunte per allestimento 8x2 (1+3)	
Pos.	Denominazione
23	Cilindro freno doppio 24/14" oppure 30/14"
32	Valvola relè
33	Cilindro freno 12"
34	Freno a disco SN7
35	Serbatoio aria 20l
36	Selettore massima pressione
37	Presa controllo pressione

Schema impianto frenante - senza sezione rimorchio

Tightening tolerance - 1004	ISO 2768 - ---- Tolerancing ISO 8015	Author P. TOPPANO	Date 04/09/2014	Scale 1:1

S.T. System Truck S.p.A.
via Paesa, 28 - I 46048 Roverbella (MN)
tel. +39 0376 696809
www.stsystemtruck.com

Description: SCHEMA IMPIANTO PNEUMATICO IVECO 260S 280X EBS2 Y/P/PS/FP/FS-D/GV/CM 6x2 IN ALLESTIMENTO 8X2 (1+3) - SENZA SOLLEVATORE

Code	Drawing	Sheet	Format
25.01.20.0031	25.01.20.0031	2/4	A3

E24*13R11/18*0056*02

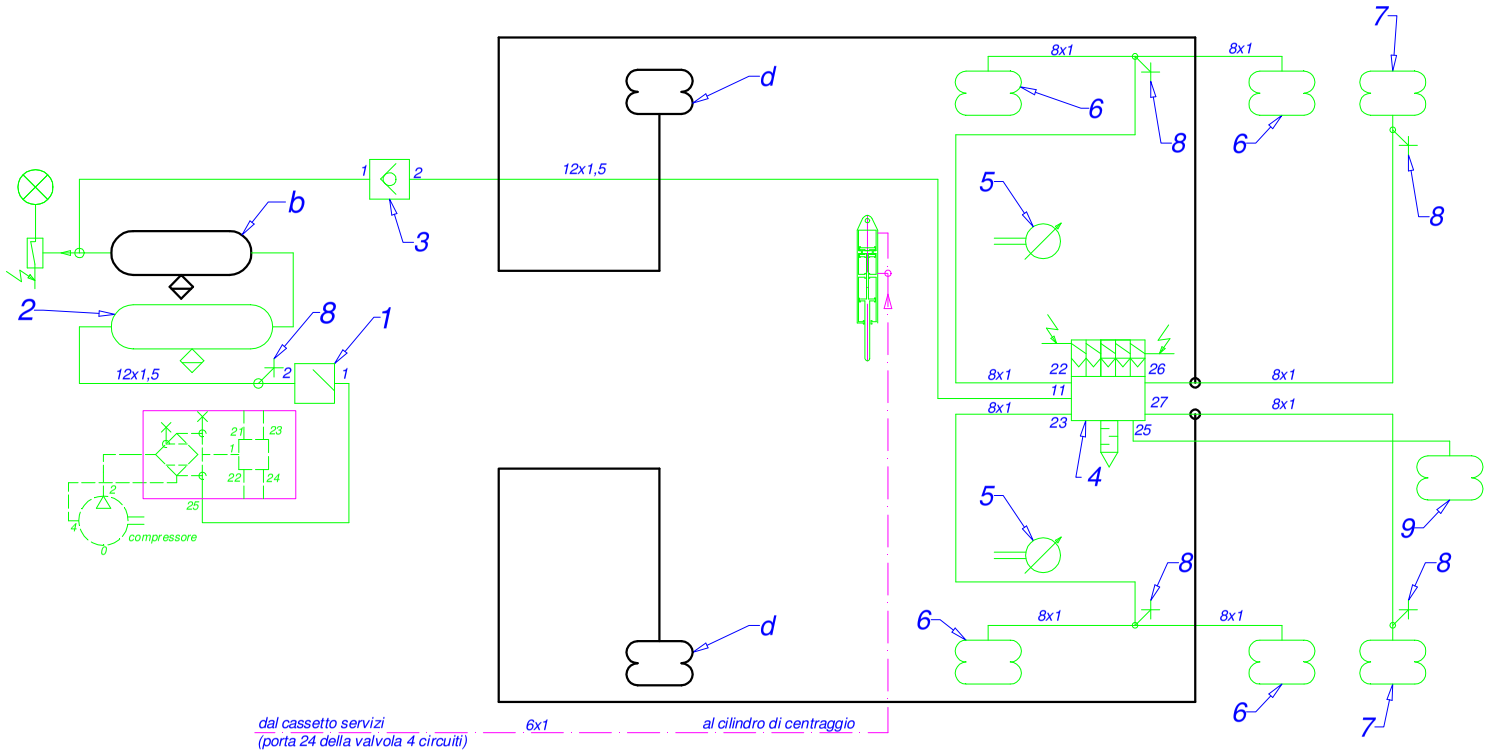

USURA FRENI DEL 2° ASSE

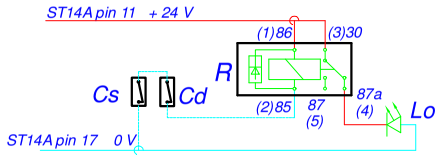

LEGENDA
R - Relé con diodo - N.C., Lo acceso, con pattini usurati -
Cs - Contatto su pinza freno sinistra (contatto aperto con pattini usurati)
Cd - Contatto su pinza freno destra (contatto aperto con pattini usurati)
Lo - Led rosso di segnalazione usura freni

LEGENDA
1 - Valvola presa aria con ritorno limitato
2 - Serbatoio aria 30 l (approvato CE) con valvola manuale di spurgo condensa
3 - Valvola di ritenuta
4 - Distributore elettropneumatico
5 - Sensore di posizione (livellatore)
6 - Molla ad aria sospensione asse motore
7 - Molla ad aria sospensione asse posteriore
8 - Presa per controllo pressione
9 - Molla ad aria sollevatore asse posteriore

Parti aggiunte per allestimento 8x2 1+3
a - Serbatoio aria 30 l - approvato CE
d - Molla ad aria sospensione 2° asse

L'impianto è dotato di traspositore di carico sul 4° asse (originale) e sul 2° asse (comandato direttamente dal 4° asse).

impianto pneumatico originale del veicolo
impianto aggiunto: tubazione pneumatica
impianto aggiunto: cavo elettrico + 24V
impianto aggiunto: cavo elettrico - massa

Schema sospensioni e servizi - connessione al 4° asse posteriore

Rev.	
4	Aggiornato cartiglio, Aggiunto foglio 4 - 13/07/20 F.M.
3	Aggiunte misure breke chambers assali originali in alternativa 18/06/18 P.M.
2	Modifica impianto frenante (alimentazione relè n°32) - 20/02/15 P.T.
1	Modificato cartiglio - 12/01/15 P.T.

E24*13R11/18*0056*02

Tightening tolerance - 1004	ISO 2768 - ---- Tolerancing ISO 8015	Author P. TOPPANO	Date 04/09/2014	Scale 1:1

S.T. System Truck S.p.A.
via Paesa, 28 - I 46048 Roverbella (MN)
tel. +39 0376 696809
www.stsystemtruck.com

Description: SCHEMA IMPIANTO PNEUMATICO IVECO 260S 280X EBS2 Y/P/PS/FP/FS-D/GV/CM 6x2 IN ALLESTIMENTO 8X2 (1+3) - SENZA SOLLEVATORE

Code	Drawing	Sheet	Format
25.01.20.0031	25.01.20.0031	3/4	A3

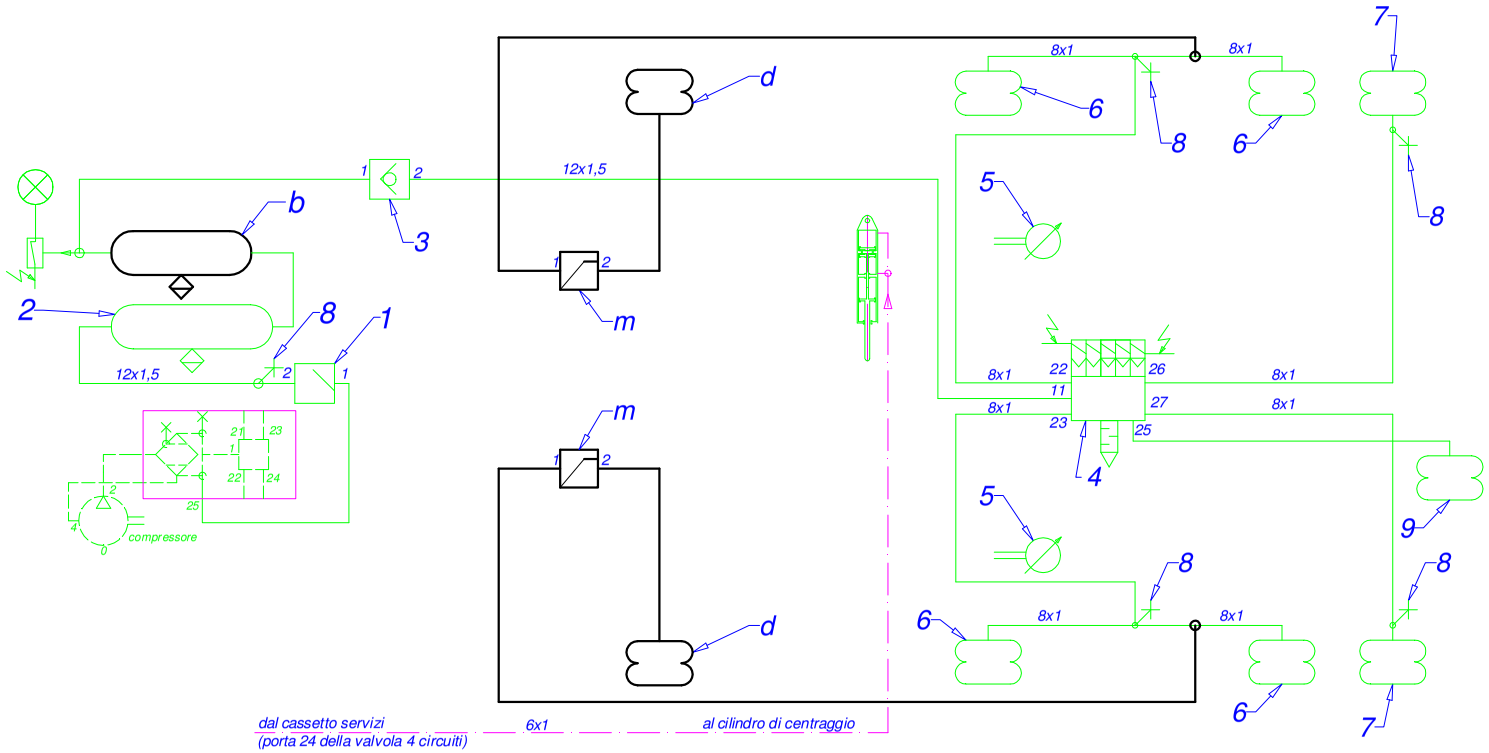

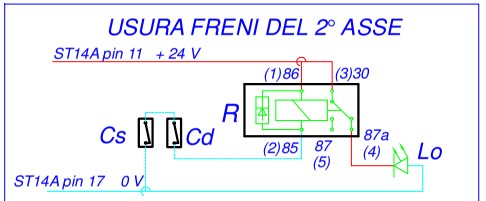

LEGENDA
R - Relé con diodo - N.C., Lo acceso, con pattini usurati -
Cs - Contatto su pinza freno sinistra (contatto aperto con pattini usurati)
Cd - Contatto su pinza freno destra (contatto aperto con pattini usurati)
Lo - Led rosso di segnalazione usura freni

impianto pneumatico originale del veicolo
impianto aggiunto: tubazione pneumatica
impianto aggiunto: cavo elettrico + 24V
impianto aggiunto: cavo elettrico - massa

LEGENDA
1 - Valvola presa aria con ritorno limitato
2 - Serbatoio aria 30 l (approvato CE) con valvola manuale di spurgo condensa
3 - Valvola di ritenuta
4 - Distributore elettropneumatico
5 - Sensore di posizione (livellatore)
6 - Molla ad aria sospensione asse motore
7 - Molla ad aria sospensione asse posteriore
8 - Presa per controllo pressione
9 - Molla ad aria sollevatore asse posteriore

Parti aggiunte per allestimento 8x2 1+3
a - Serbatoio aria 30 l - approvato CE
d - Molla ad aria sospensione 2° asse
m - Valvola limitatrice - 7.5 bar

L'impianto è dotato di traspositore di carico sul 4° asse (originale) e sul 2° asse (comandato direttamente dal 4° asse).

Schema sospensioni e servizi - connessione al ponte motore

Rev.	
4	Aggiornato cartiglio, Aggiunto foglio 4 - 13/07/20 F.M.
3	Aggiunte misure breke chambers assali originali in alternativa 18/06/18 P.M.
2	Modifica impianto frenante (alimentazione relè n°32) - 20/02/15 P.T.
1	Modificato cartiglio - 12/01/15 P.T.

E24*13R11/18*0056*02

Tightening tolerance - 1004	ISO 2768 - ---- Tolerancing ISO 8015	Author P. TOPPANO	Date 04/09/2014	Scale 1:1

S.T. System Truck S.p.A.
via Paesa, 28 - I 46048 Roverbella (MN)
tel. +39 0376 696809
www.stsystemtruck.com

Description
SCHEMA IMPIANTO PNEUMATICO IVECO 260S 280X EBS2
Y/P/PS/FP/FS-D/GV/CM 6x2 IN ALLESTIMENTO 8X2 (1+3)
- SENZA SOLLEVATORE

Code	Drawing	Sheet	Format
25.01.20.0031	25.01.20.0031	4/4	A3

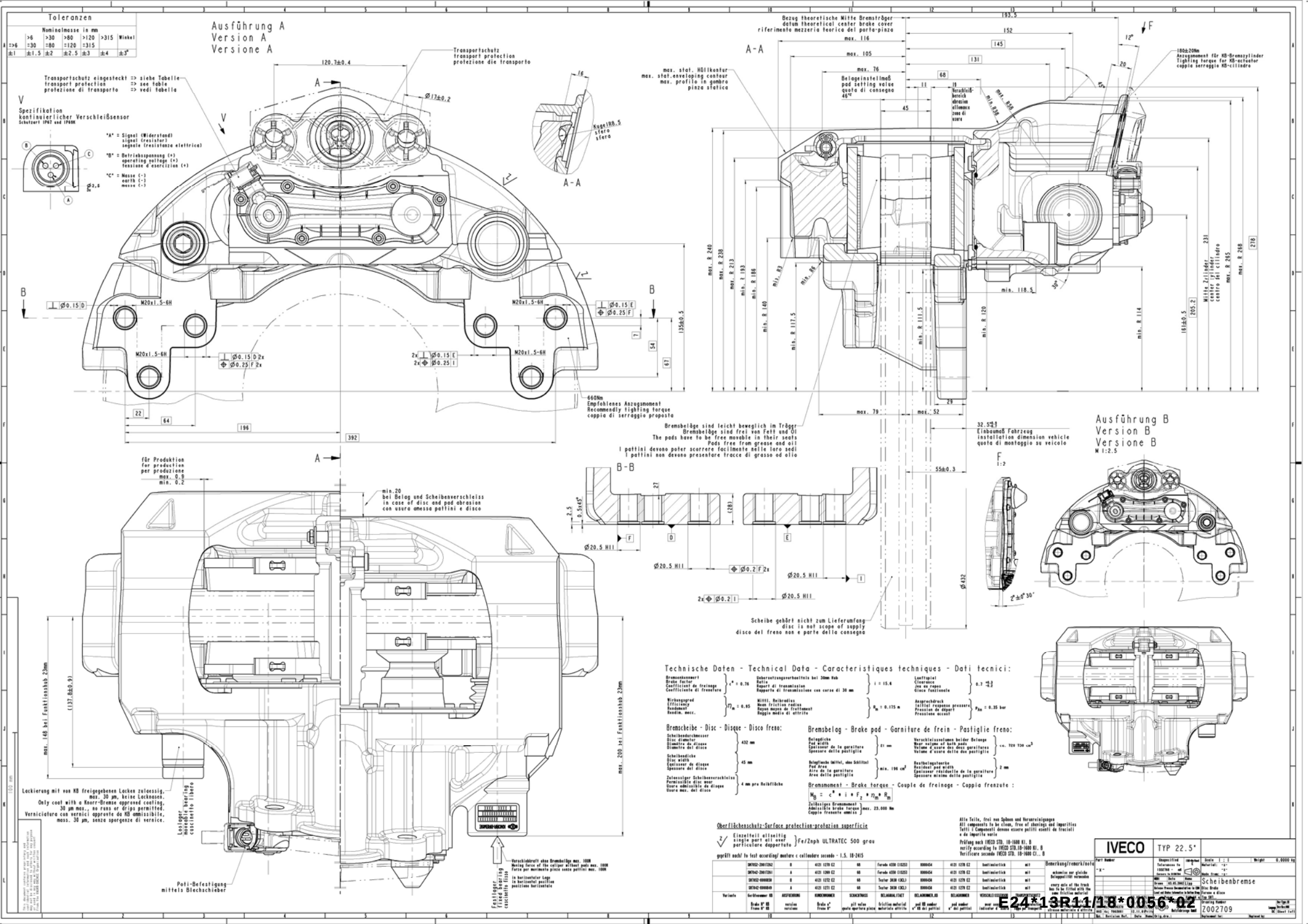
Toleranzen
Nominalmasse in mm
Ausführung A
Version A
Versione A
Transportschutz
transport protection
protezione die transporto
Transportschutz eingesteckt => siehe Tabelle
transport protection => see table
protezione di transporto => vedi tabella
Spezifikation
kontinuierlicher Verschleißsensor
Schutzart IP67 und IP69K
"A" = Signal (Widerstand)
signal (resistor)
segnale (resistenza elettrica)
"B" = Betriebsspannung (+)
operating voltage (+)
tensione d'esercizio (+)
"C" = Masse (-)
earth (-)
massa (-)
A-A
Bezug theoretische Mitte Bremsträger
datum theoretical center brake cover
riferimento mezzeria teorica del porta-pinza
max. stat. Hüllkontur
max. stat.enveloping contour
max. profilo in gombro pinza statica
Belageinstellmaß
pad setting value
quota di consegna
Verschleiß-bereich
abrasion allowance
zona di usura
180±20Nm
Anzugsmoment für KB-Bremszylinder
Tighting torque for KB-actuator
coppia serraggio KB-cilindro
Mitte Zylinder
center cylinder
centro del cilindro
660Nm
Empfohlenes Anzugsmoment
Recommendly tighting torque
coppia di serraggio proposta
Bremsbeläge sind leicht beweglich im Träger
Bremsbeläge sind frei von Fett und Öl
The pads have to be free movable in their seats
Pads free from grease and oil
I pattini devono poter scorrere facilmente nelle loro sedi
I pattini non devono presentare tracce di grasso od olio
Einbaumaß Fahrzeug
installation dimension vehicle
quota di montaggio su veicolo
Ausführung B
Version B
Versione B
M 1:2.5
B-B
für Produktion
for production
per produzione
min.20
bei Belag und Scheibenverschleiss
in case of disc and pad abrasion
con usura amessa pattini e disco
Scheibe gehört nicht zum Lieferumfang
disc is not scope of supply
disco del freno non e parte della consegna
Technische Daten - Technical Data - Caracteristiques techniques - Dati tecnici:
Bremsscheibe - Disc - Disque - Disco freno:
Bremsbelag - Brake pad - Garniture de frein - Pastiglie freno:
Bremsmoment - Brake torque - Couple de freinage - Coppia frenzuta :
Lackierung mit von KB freigegebenen Lacken zulaessig, max. 30 µm, keine Lacknasen.
Only coat with a Knorr-Bremse approved coating, 30 µm max., no runs or drips permitted.
Verniciatura con vernici approvate da KB ammissibile, mass. 30 µm, senza sporgenze di vernice.
Lagerung beweglich
Bearing
cuscinetto libero
Pati-Befestigung
mittels Blechschieber
Festlager
Fixed bearing
cuscinetto fisso
Oberflächenschutz-Surface protection-protezione superficie
Fe/Znph ULTRATEC 500 grau
geprüft nach/to test according/ montare c cullendere secondo - I.S. 18-2415
Alle Teile, frei von Spänen und Verunreinigungen
All components to be clean, free of shavings and impurities
Tutti i Componenti devono essere puliti esenti da trucioli e da impurite varie
Prüfung nach IVECO STD. 18-1600 KI. B
verify according to IVECO STD.18-1600 Kl. B
Verificare secondo IVECO STD. 18-1600 Cl.. B
IVECO
TYP 22.5"
Scheibenbremse
Disc Brake
Frenos a disco
Z002709
E24*13R11/18*0056*02