Disegno per omologazione
Drawing for type-approval

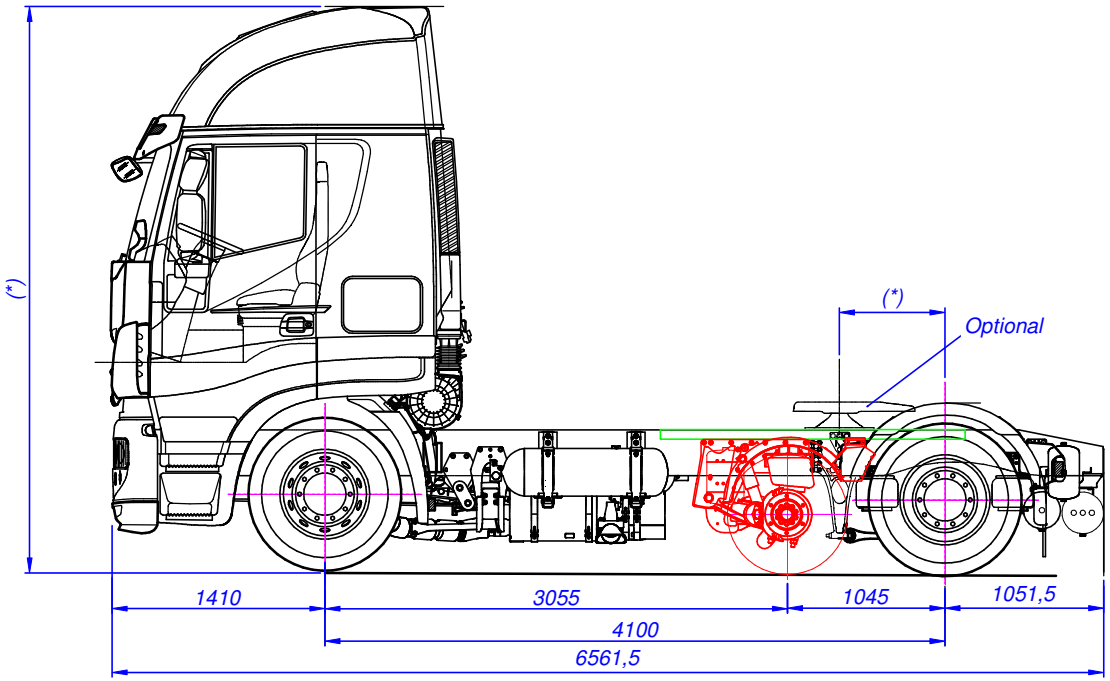

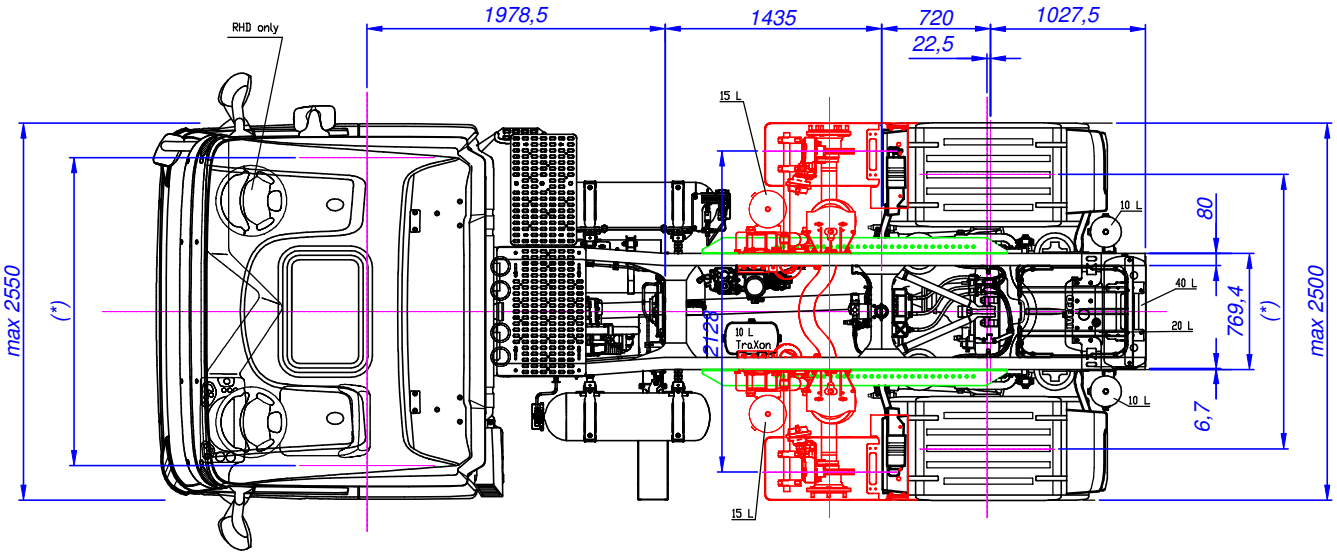

Nota (*): vedere scheda informativa
Note (*): see information document

Tightening tolerance - T004	ISO 2768 - ---- Tolerancing ISO 8015	Author F .MARTINI	Date 18/05/2019		Scale 1:25
S.T. System Truck S.p.A. via Paesa, 28 - I 46048 Roverbella (MN) tel. +39 0376 696809 www.stsystemtruck.com	All proprietary rights reserved by S.T. System Truck S.p.A. The reproduction, distribution and utilization of this document as well as the communication of its content to others without express authorisation is prohibited (see ISO 16016:2016)	Description FIGURINO VEICOLO IVECO STRALIS AS440S CNG - ALLUNGAMENTO PASSO DA 3800 A 4100 mm CON ASSALE CENTRALE 4.5t 17.5" - CON BOMBOLE AGILITY FUELS - VERS. CCM 74608			
		Code 55.01.02.0094	Drawing 55.01.02.0094	Sheet 1/1	Format A2