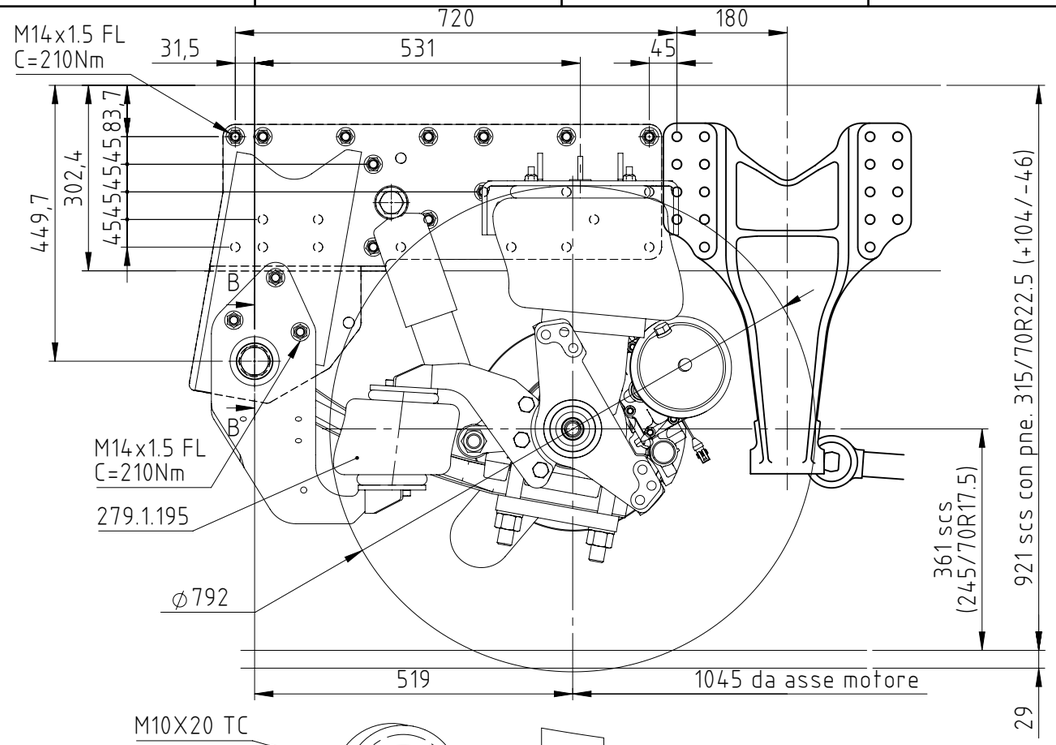

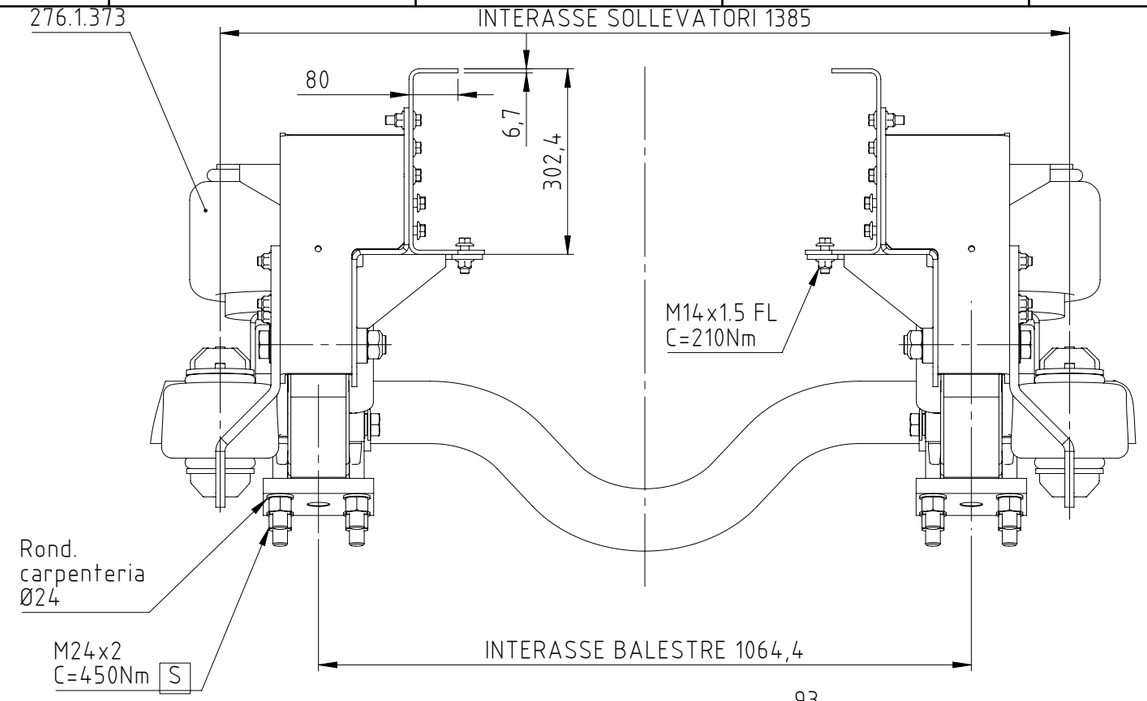

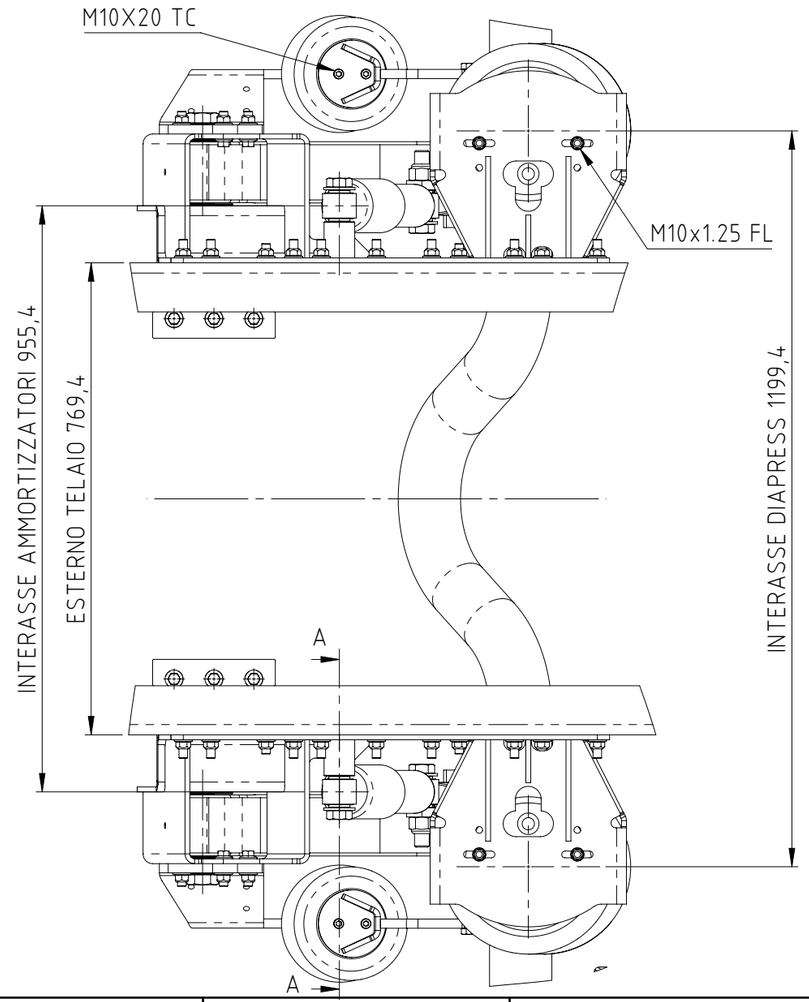

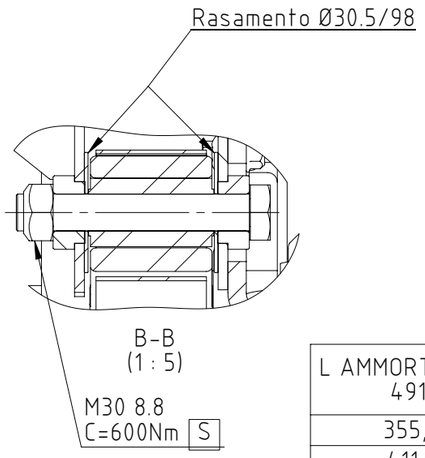

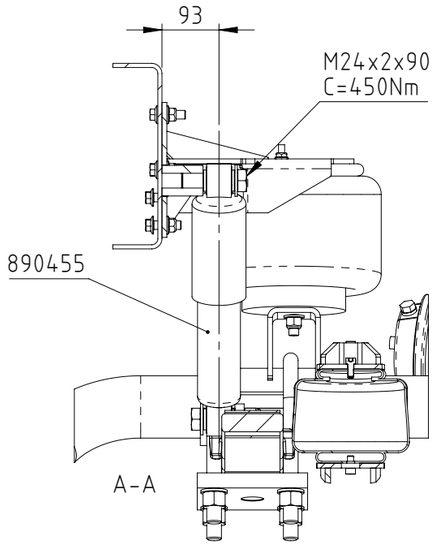

L AMMORT. (330-491)	H DIAPRESS (140-465)	H SOLLEV. (65-226)	CORSA MAX SOSP. AX AGGIUNTO
355,6	140	199	-97
411,5	240,7	153	---
491	396,1	87	+139

Rev.	Descrizione	Nota	Data	Mod.	App.	Stato
0	Prima approvazione		23/05/2019		F.Martini	A

Material	Heat treatment	Surface finishing	Mass (kg)
--	--	--	772,85

Tightening tolerance	ISO 2768 - ----	Author	Date		Scale
- 1004	Tolerancing ISO 8015	P.MARTINI	06/11/2018		1:10

S.T. System Truck S.p.A.
via Paesa, 28 - I 46048 Roverbella (MN)
tel. +39 0376 696809
www.stsystemtruck.com

All proprietary rights reserved by S.T. System Truck S.p.A. The reproduction, distribution and utilisation of this document as well as the communication of its content to others without express authorisation is prohibited (see ISO 16016:2016)

Description
SOSPENSIONE INT. PNEUM. ASSE FISSO 4.5 TON - 245/70R17, 5" PER IVECO
AS 440S CNG - WB 3800 ALLUNGATO A 4100

Code	Drawing	Sheet	Format
10.03.15.0038	10.03.15.0038	1/1	A3