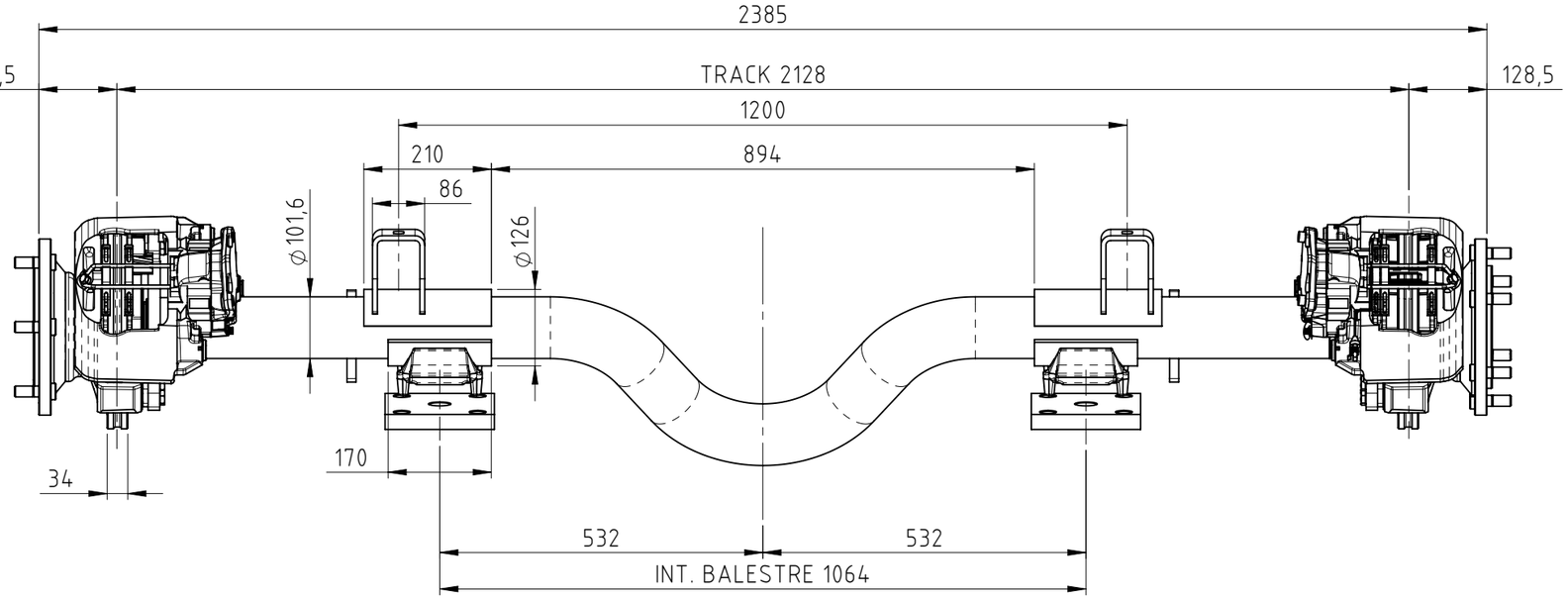

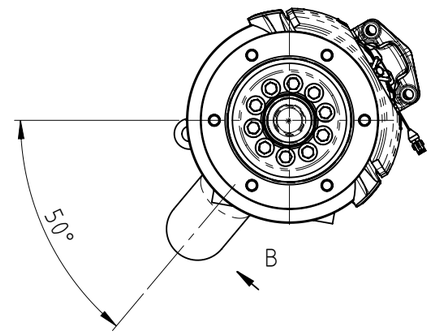

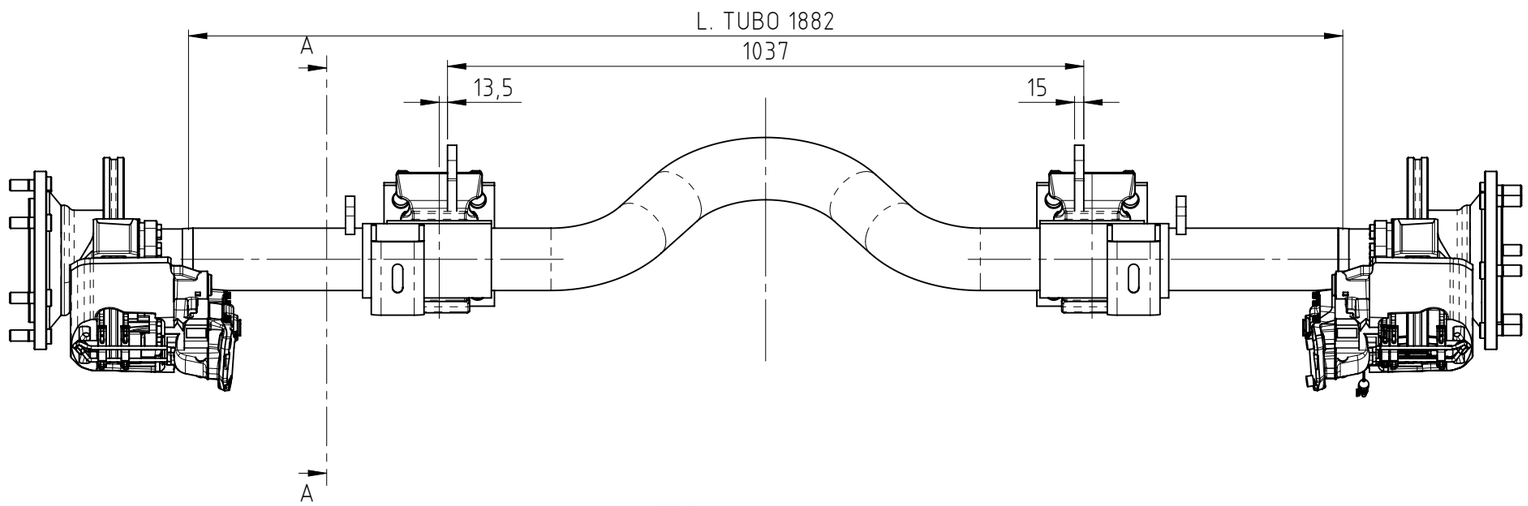

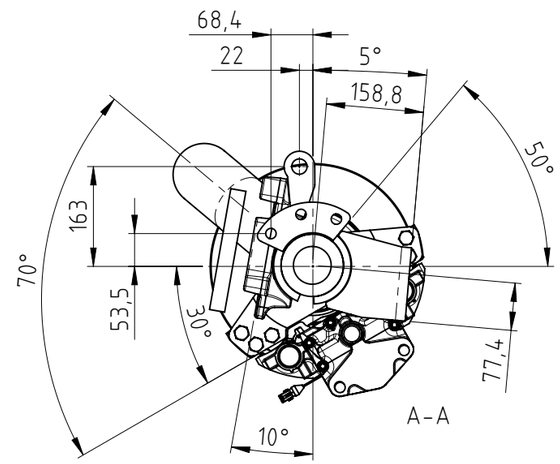

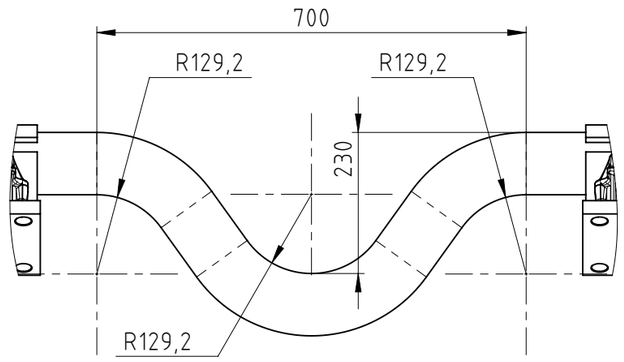

VISTA B

ASSALE FORNITO CON DADI RUOTA "M" M18x1.5 (12x)
E DUE PIASTRE SCIOLTE TECMA 04056005

Rev.	Descrizione	Nota	Data	Mod.	App.	Stato
0	Prima approvazione		16/01/2019		F.Martini	A

Material	Heat treatment	Surface finishing	Mass (kg)
	--	--	296.1

Tightening tolerance	ISO 2768 - ----	Author	Date	Scale
- I004	Tolerancing ISO 8015	F.MARTINI	16/01/2019	1:10

S.T. System Truck S.p.A.
via Paesa, 28 - I 46048 Roverbella (MN)
tel. +39 0376 696809
www.stsystemtruck.com

All proprietary rights reserved by S.T. System Truck S.p.A. The reproduction, distribution and utilisation of this document as well as the communication of its content to others without express authorisation is prohibited (see ISO 16016:2016)

Description
ASSALE TECMA FISSO 4.5 TON - RUOTA 17.5" - MOZZO MB - FRENO WW PAN17
- INT. BALESTRE 1064

Code	Drawing	Sheet	Format
S08F052544	99.95.16.0753	1/1	A3