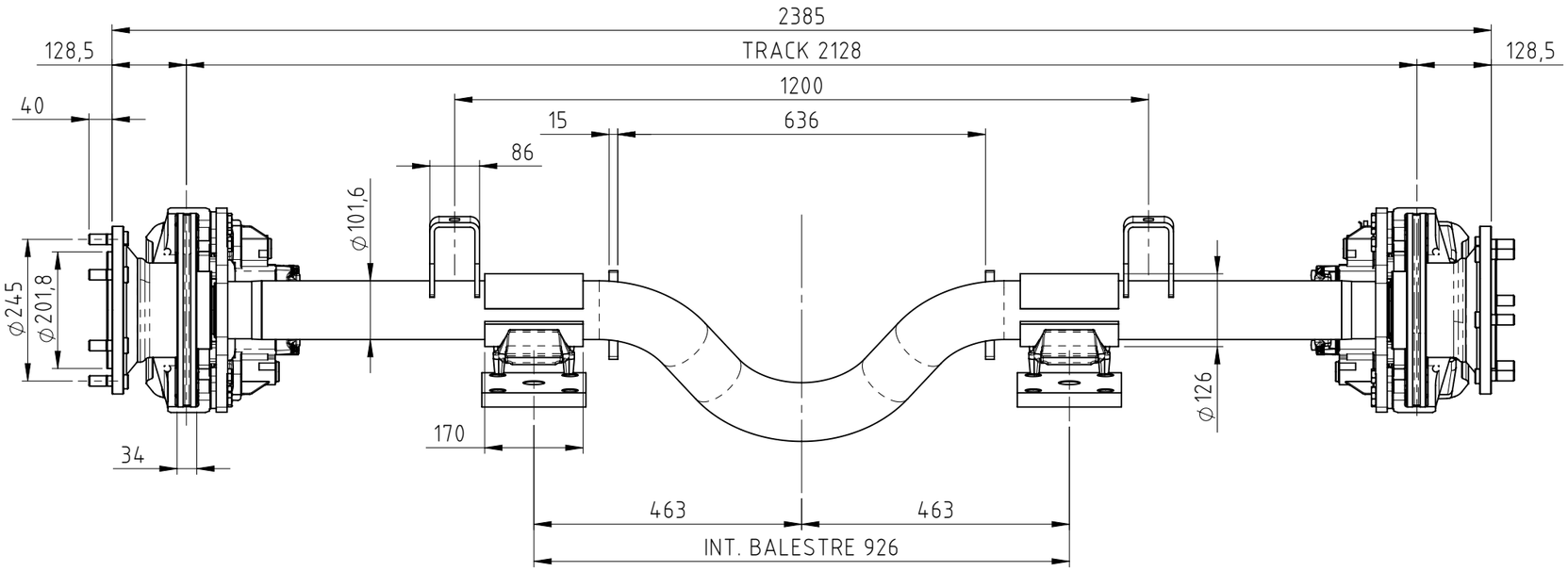

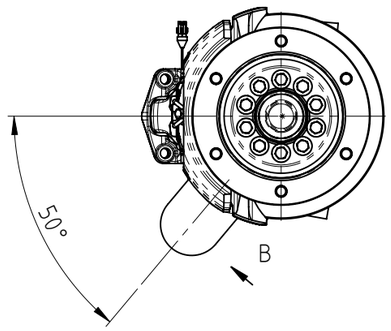

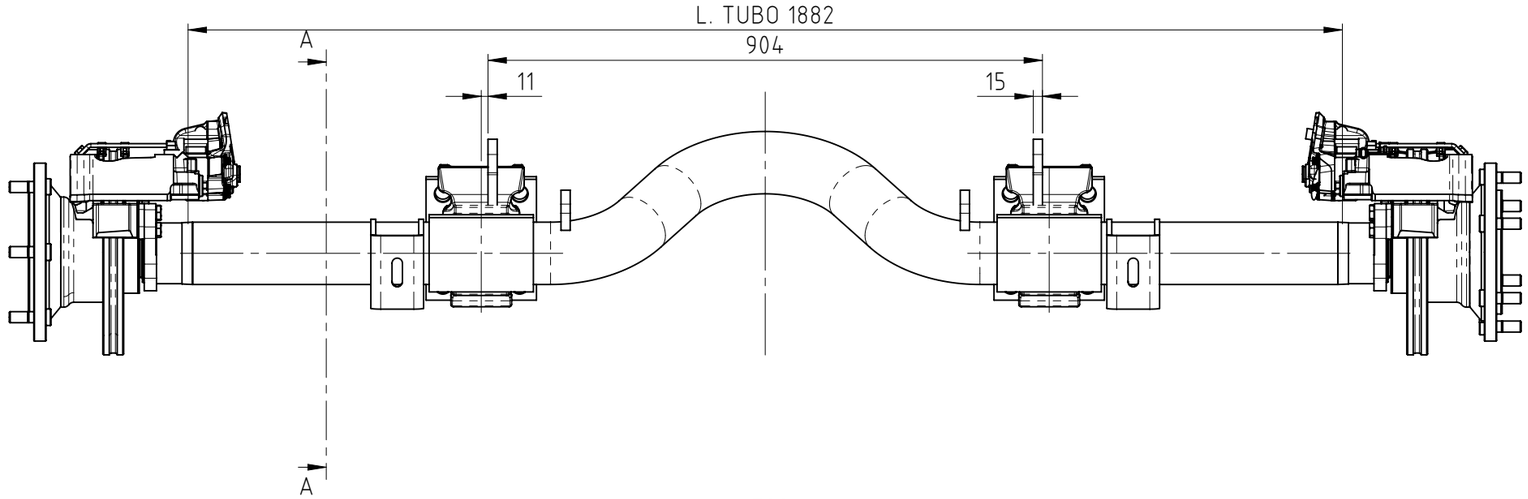

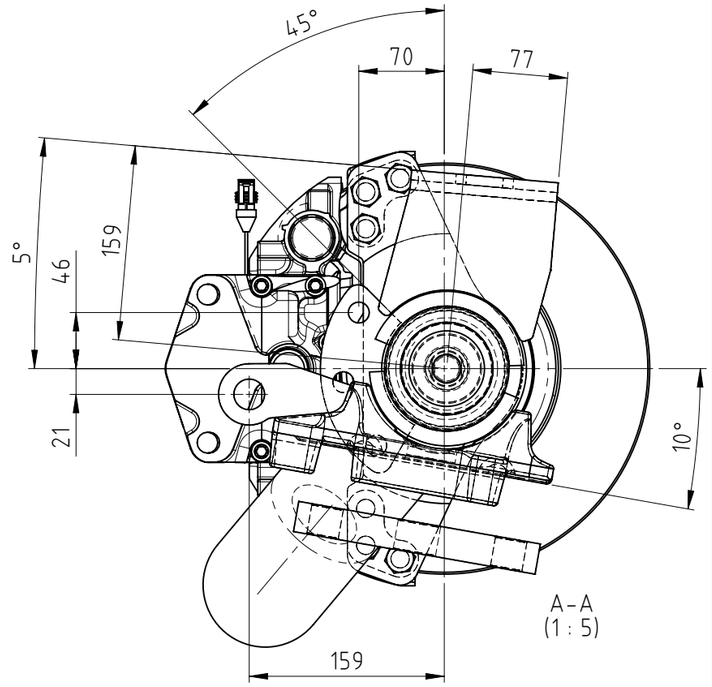

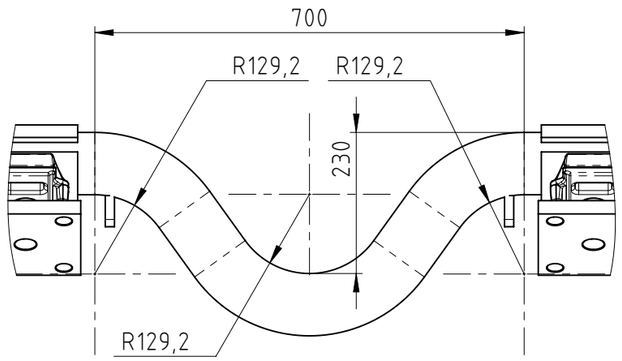

VISTA B

ASSALE FORNITO CON DADI RUOTA "M" M18x1.5 (12x)
E DUE PIASTRE SCIOLTE TECMA 04056005

Material	Heat treatment	Surface finishing	Mass (kg)
	--	--	296.1

Tightening tolerance	ISO 2768 - ----	Author	Date	Scale
- 1004	Tolerancing ISO 8015	F.MARTINI	18/05/2019	1:10

S.T. System Truck S.p.A.
via Paesa, 28 - I 46048 Roverbella (MN)
tel. +39 0376 696809
www.stsystemtruck.com

All proprietary rights reserved by S.T. System Truck S.p.A. The reproduction, distribution and utilisation of this document as well as the communication of its content to others without express authorisation is prohibited (see ISO 16016:2016)

Description
ASSALE TECMA FISSO 4.5 TON - RUOTA 17.5" - MOZZO MB - FRENO WW PAN17
- INT. BALESTRE 926

Code	Drawing	Sheet	Format
S08F052581	99.95.16.0754	1/1	A3

Rev.	Descrizione	Data	Nota	Mod.	App.	Stato
0	Prima approvazione	18/05/2019			F.Martini	A