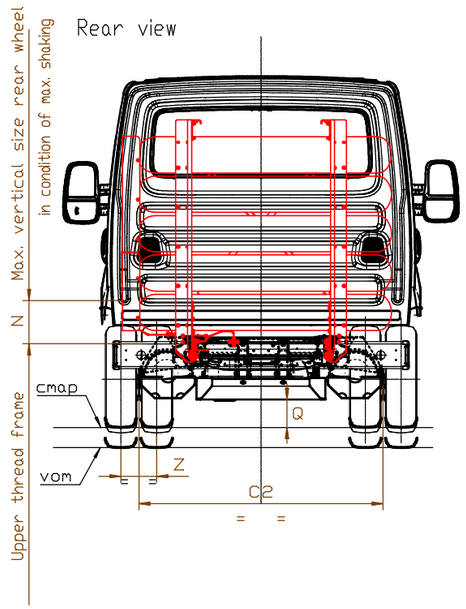

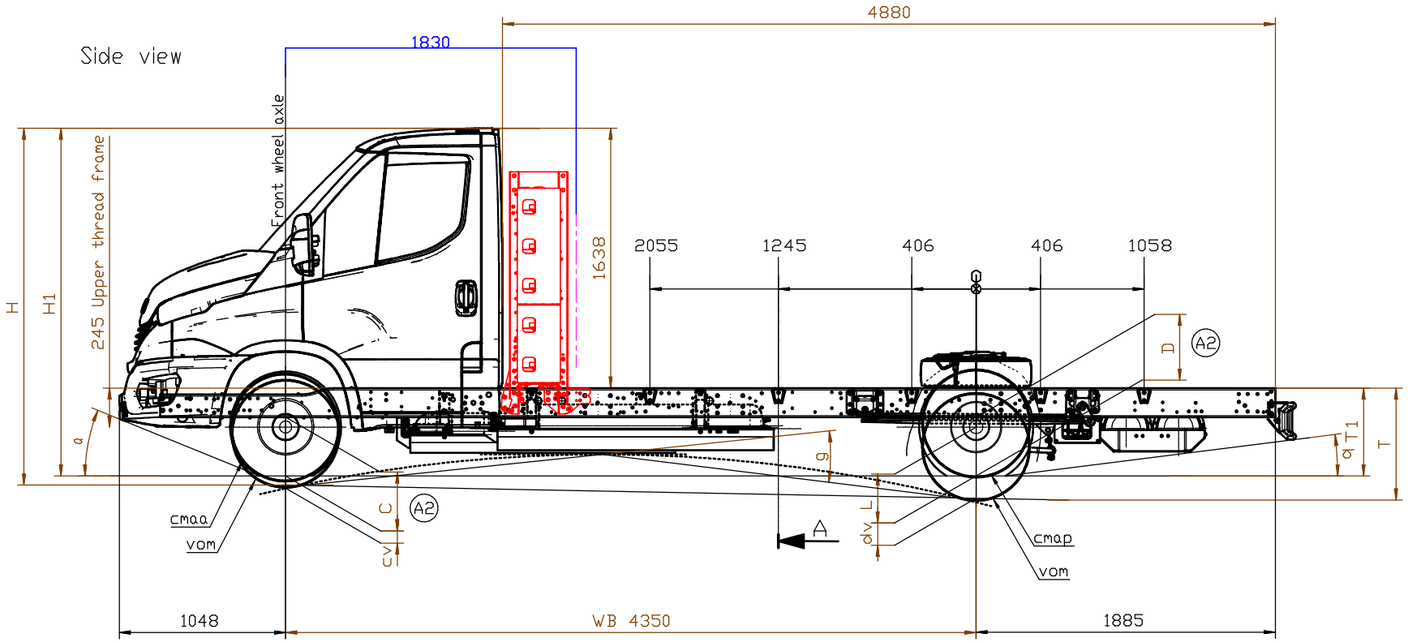

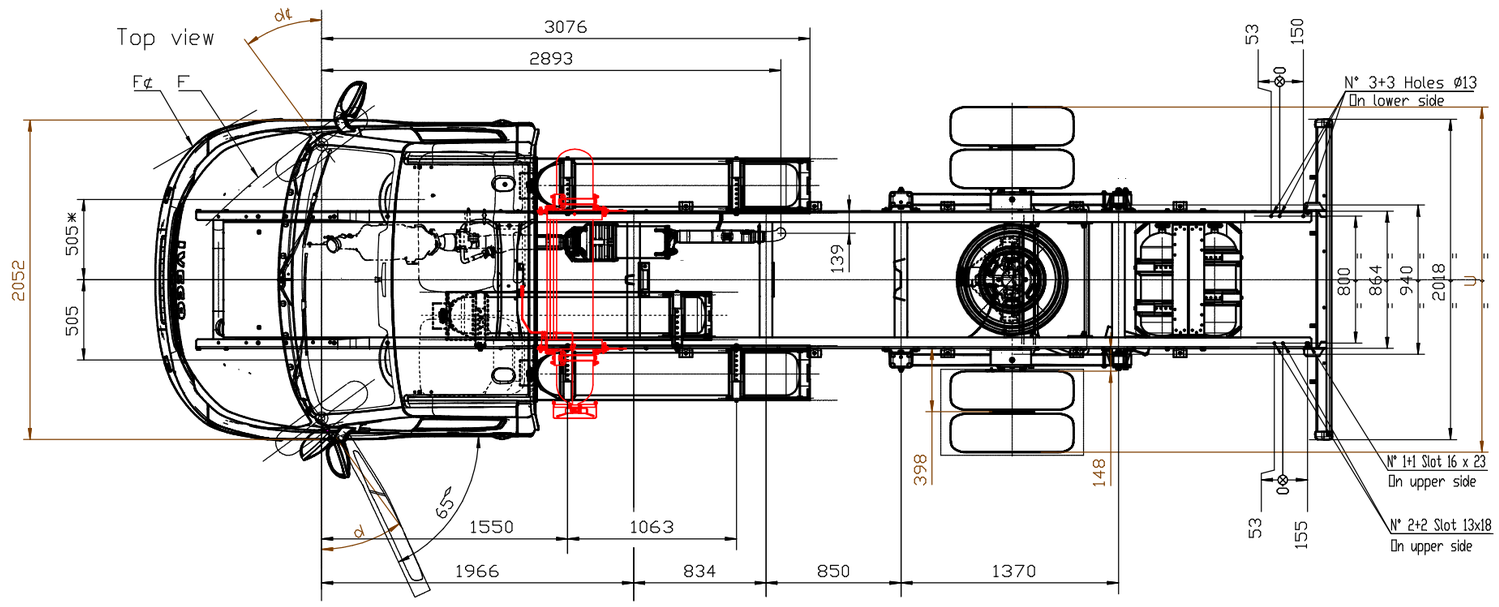

Quote parametriche come da disegno Iveco 5802404171

Tightening tolerance - T004	ISO 2768 - ---- Tolerancing ISO 8015	Author P.M.	Date 12/10/2019	Scale 1:20
S.T. System Truck S.p.A. via Paesa, 28 - I 46048 Roverbella (MN) tel. +39 0376 696809 www.stsystemtruck.com	All proprietary rights reserved by S.T. System Truck S.p.A. The reproduction, distribution and utilisation of this document as well as the communication of its content to others without express authorisation is prohibited (see ISO 16016:2016).	Description FIGURINO IVECO DAILY 70C CNG WB 4350 APPLICAZIONE BOMBOLE CNG SU RACK VERTICALE DIETRO CABINA		
		Code 55.01.01.0043	Drawing 55.01.01.0043	Sheet 1/1 Format A1