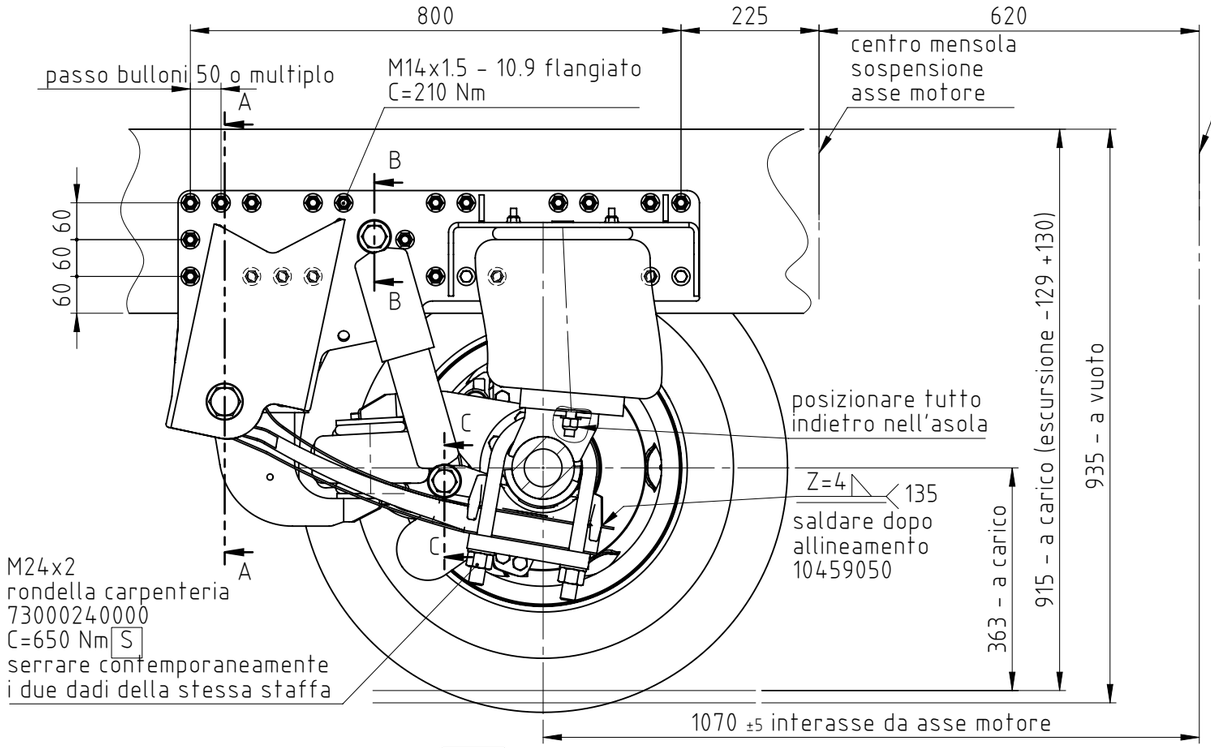

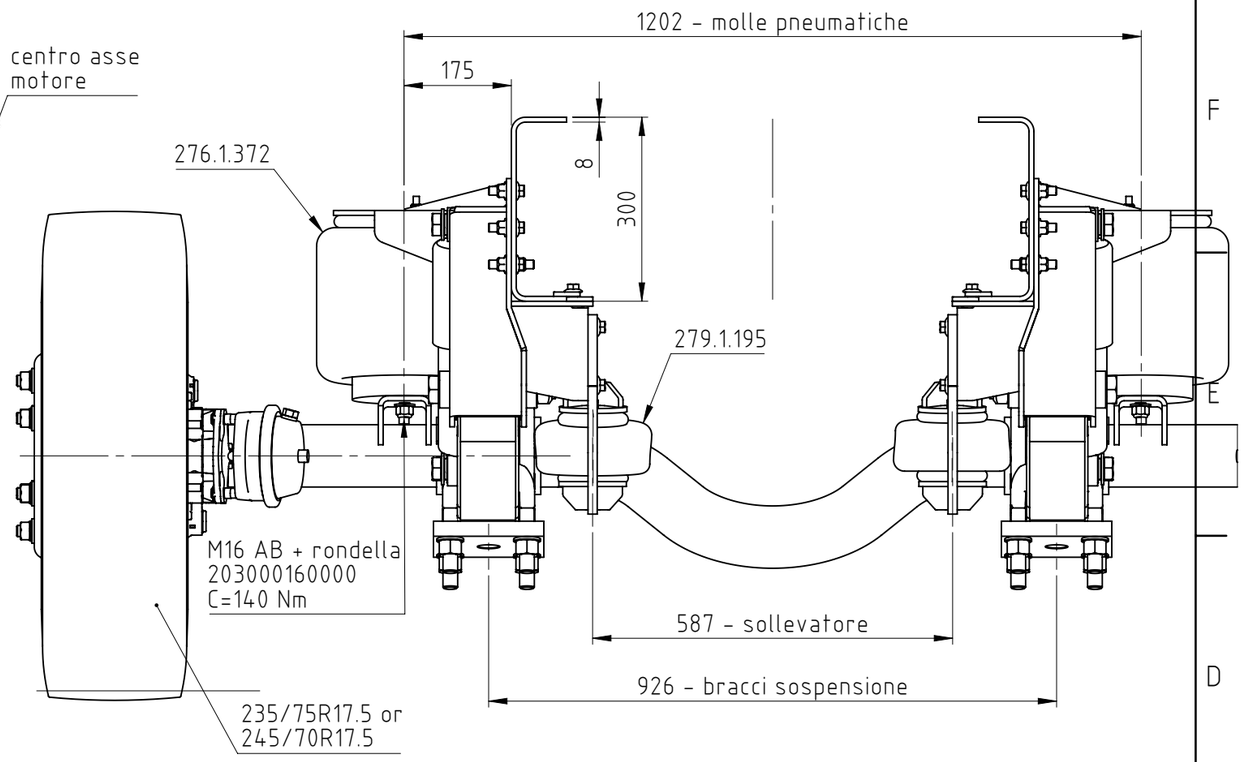

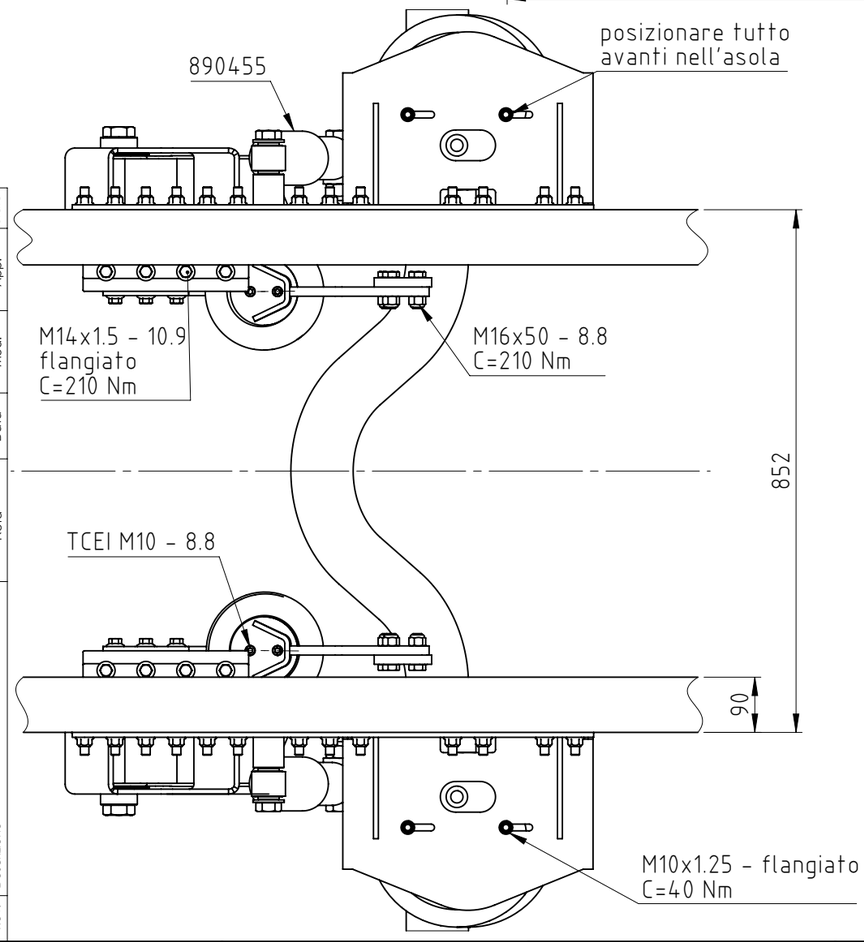

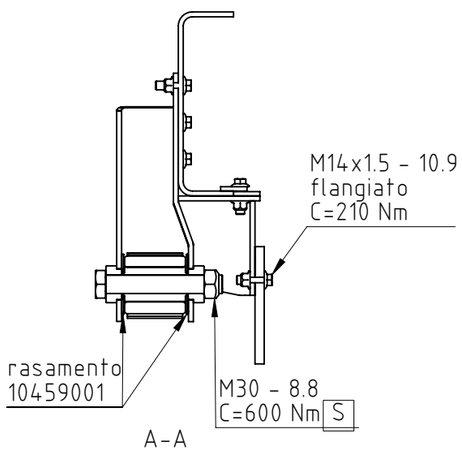

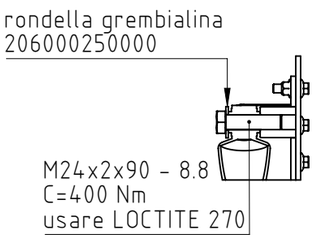

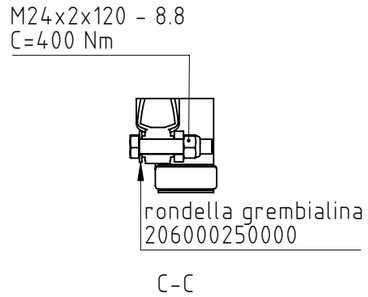

Pneumatici veicolo: anteriori 385/55R22.5 - posteriori 315/60R22.5

Rev.	Descrizione	Nota	Data	Mod.	App.	Stato
0	Prima approvazione		17/03/2020		P.Martini	A

Material	Heat treatment	Surface finishing	Mass (kg)
	--	--	1.466,63

Tightening tolerance	ISO 2768 - ----	Author	Date	Scale
- 1004	Tolerancing ISO 8015	P.MARTINI	12/03/2020	1:10

S.T. System Truck S.p.A.
via Paesa, 28 - I 46048 Roverbella (MN)
tel. +39 0376 696809
www.stsystemtruck.com

All proprietary rights reserved by S.T. System Truck S.p.A. The reproduction, distribution and utilisation of this document as well as the communication of its content to others without express authorisation is prohibited (see ISO 16016:2016)

Description
SOSPENSIONE INT. PNEUM. ASSE FISSO 4.5 TON - 17.5"
RENAULT D-WIDE
LONGHERONE 300 - 385/55 + 315/60R22.5 (H=915)

Code	Drawing	Sheet	Format
10.03.15.0041	10.03.15.0041	1/1	A3