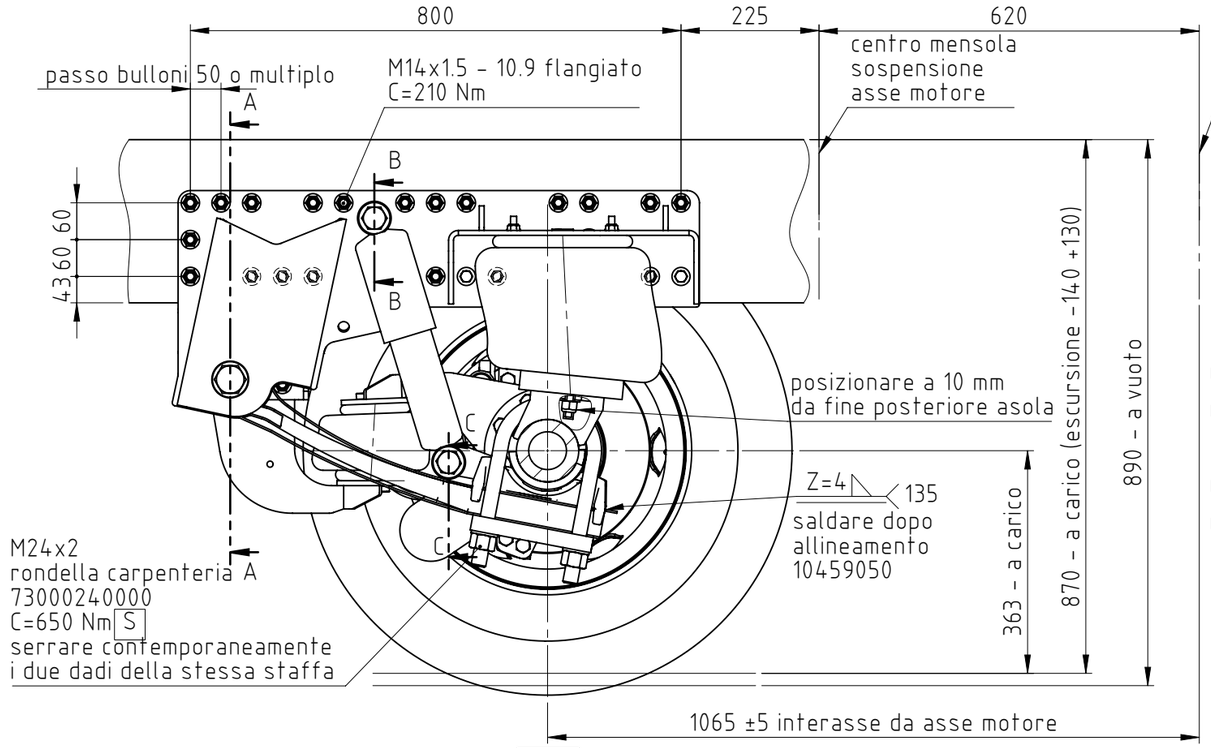

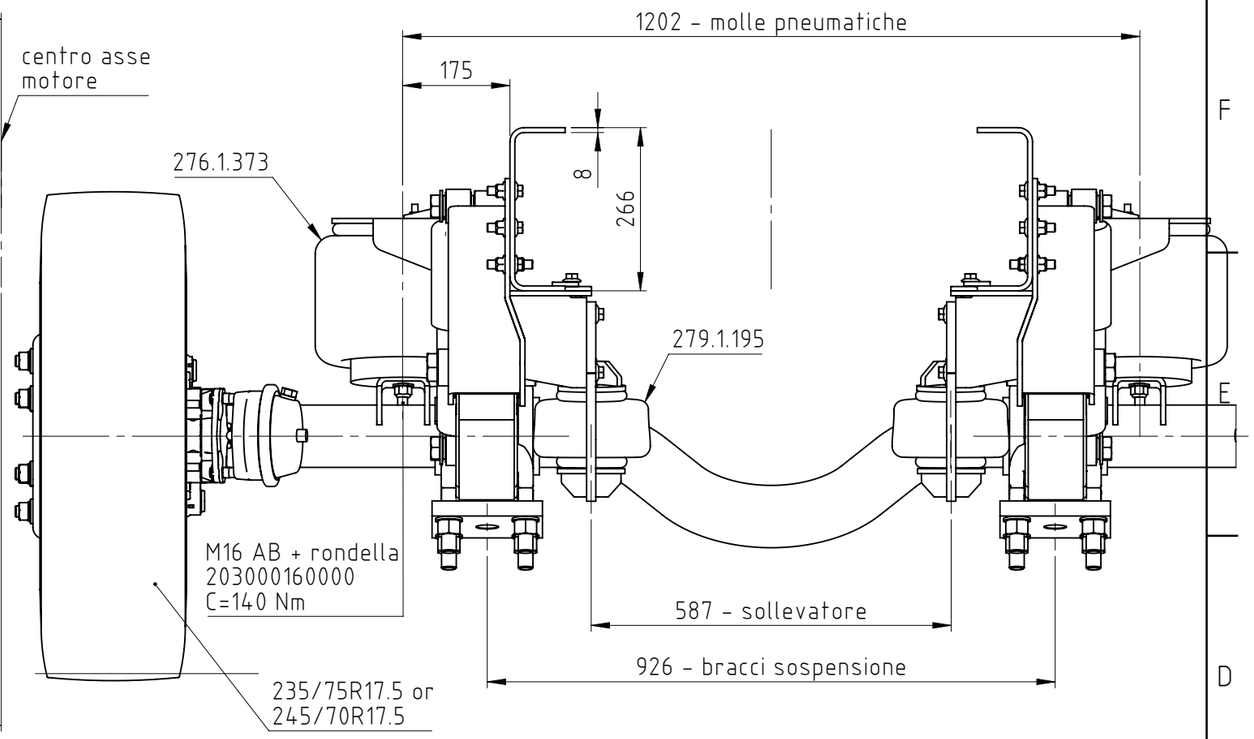

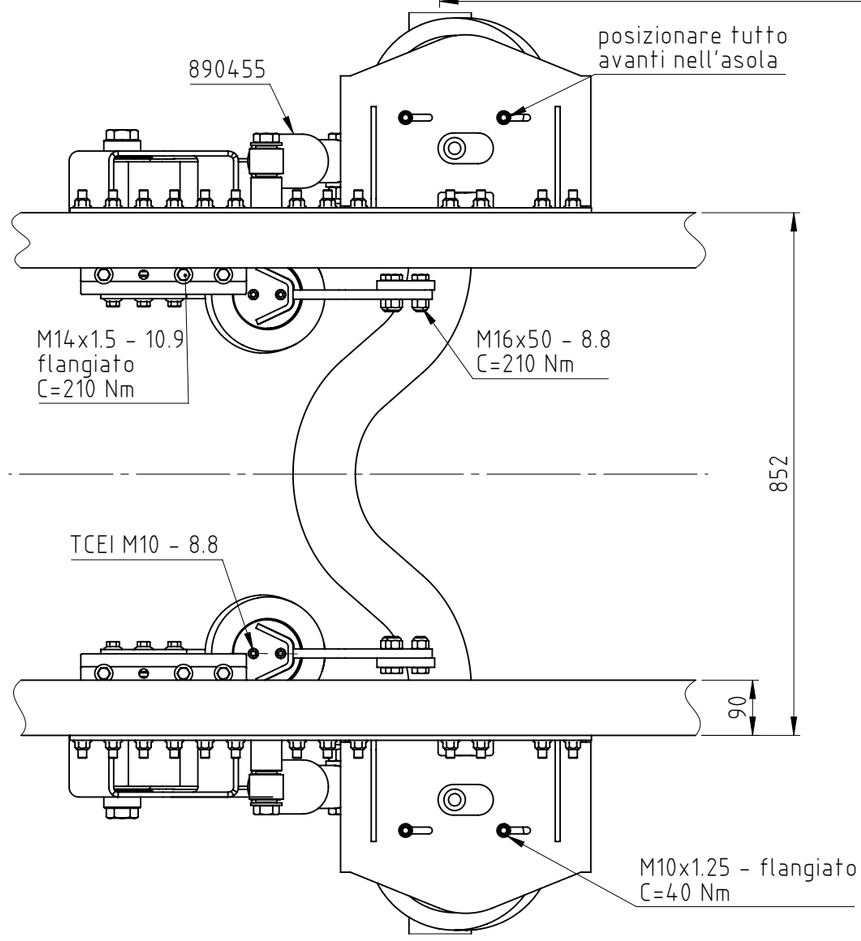

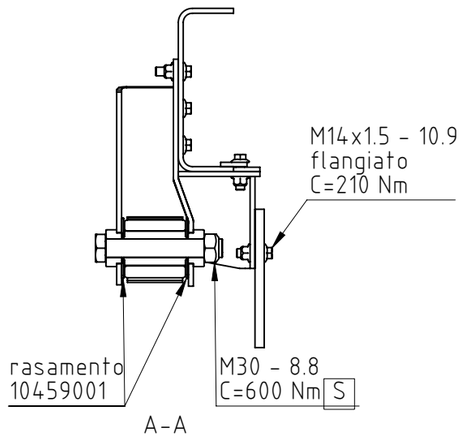

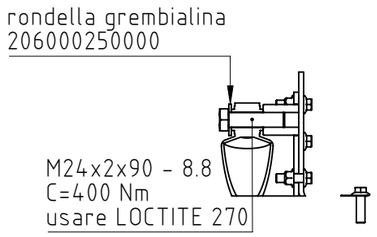

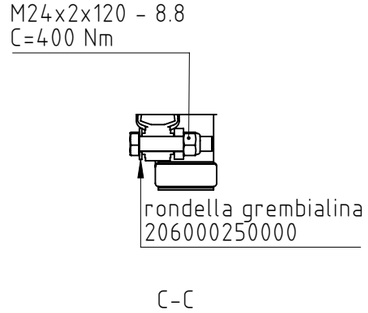

Pneumatici veicolo: anteriori 315/60R22.5 - posteriori 315/60R22.5

Rev.	Descrizione	Nota	Data	Mod.	App.	Stato
0	Prima approvazione		18/03/2020		P.Martini	A

Material	Heat treatment	Surface finishing	Mass (kg)
	--	--	1.461,43

Tightening tolerance	ISO 2768 - ----	Author	Date	Scale
- I004	Tolerancing ISO 8015	P.MARTINI	17/03/2020	1:10

S.T. System Truck S.p.A.
via Paesa, 28 - I 46048 Roverbella (MN)
tel. +39 0376 696809
www.stsystemtruck.com

All proprietary rights reserved by S.T. System Truck S.p.A. The reproduction, distribution and utilisation of this document as well as the communication of its content to others without express authorisation is prohibited (see ISO 16016:2016)

Description
SOSPENSIONE INT. PNEUM. ASSE FISSO 4.5 TON - 17.5"
RENAULT D-WIDE LOW
LONGHERONE 266 - 315/60R22.5 (H=870)

Code	Drawing	Sheet	Format
10.03.15.0042	10.03.15.0042	1/1	A3